METAL EARTH™

3D LASER CUT MODELS

360° view

It is highly recommended that you visit
www.fascinations.com/metalearth360/mms291
to see the completed model before assembling your own

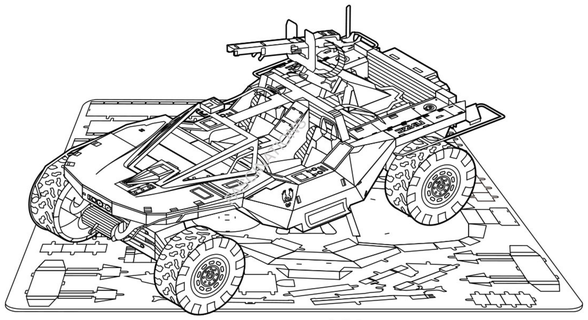

mms291

To create the best connections

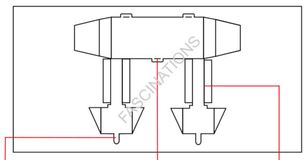

Insertion tabs are inserted and then folded

Insertion holes

Fold lines can be seen as shown here

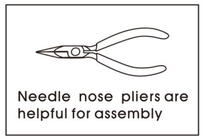

Needle nose pliers are helpful for assembly

- Insert tab and bend 90 degrees for most visible areas
- Insert tab and twist 90 degrees is best in some areas to ensure a tight connection

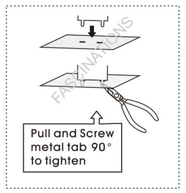

Metal sheets

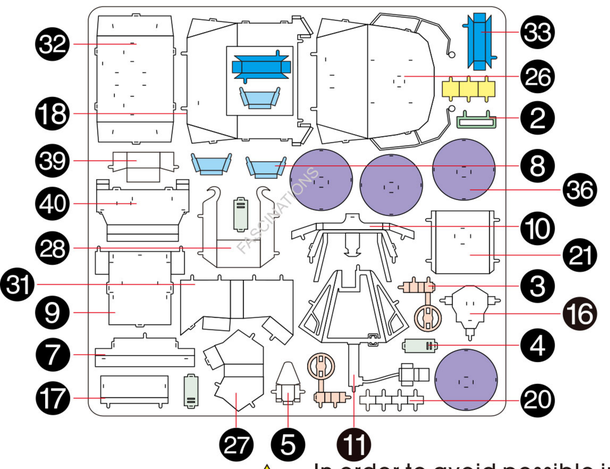

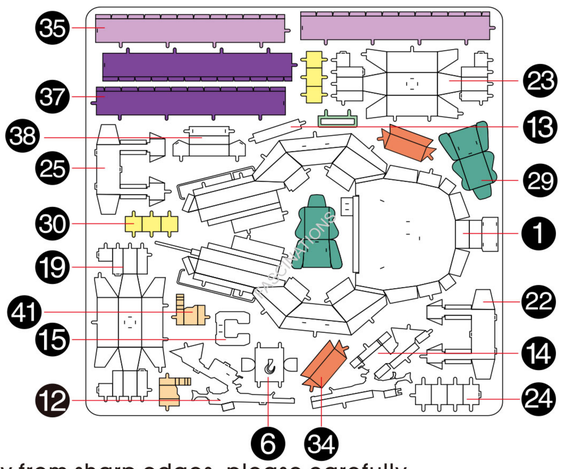

In order to avoid possible injury from sharp edges, please carefully discard the metal sheet after parts have been removed

Assembly Flow Chart

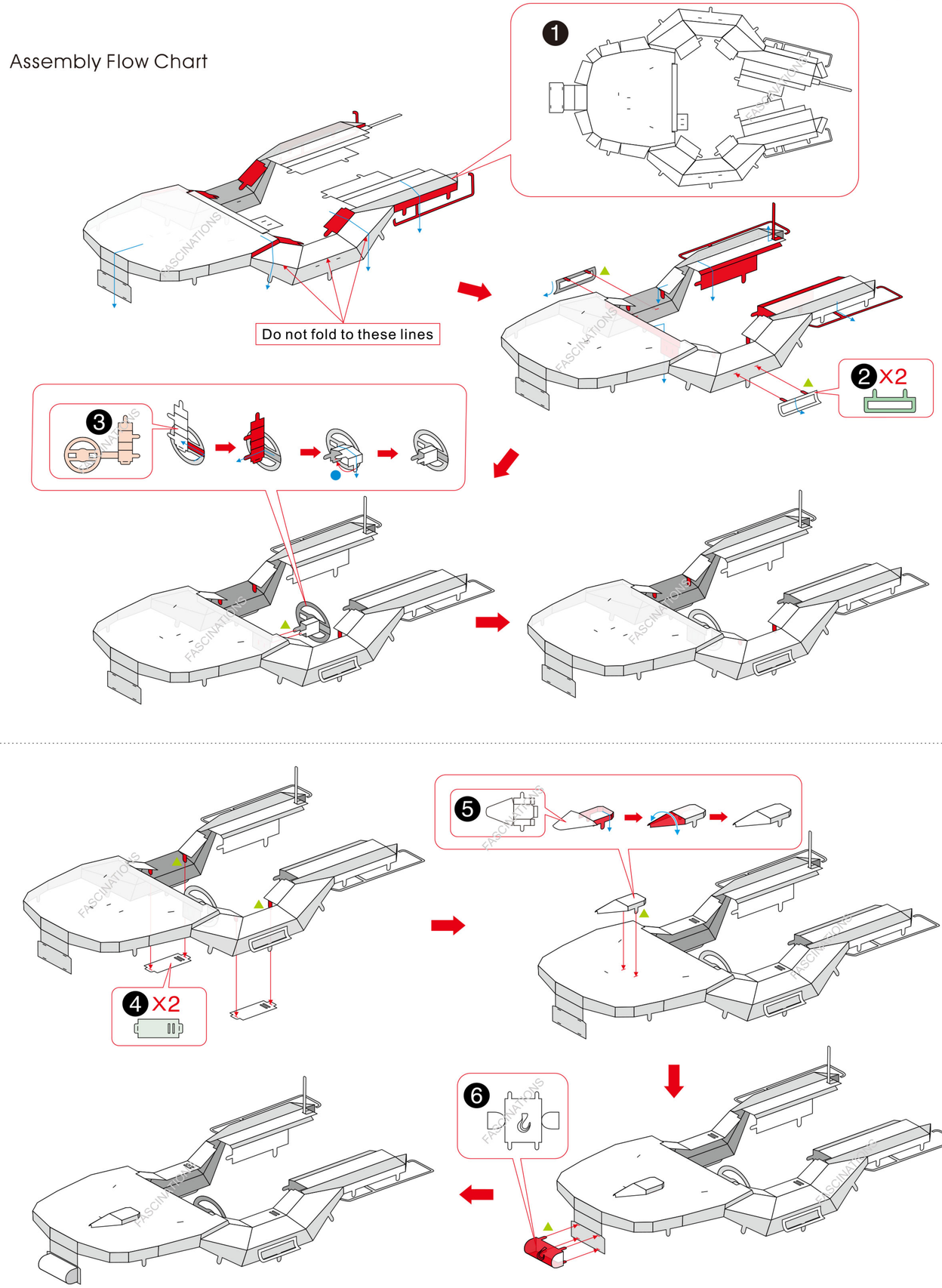

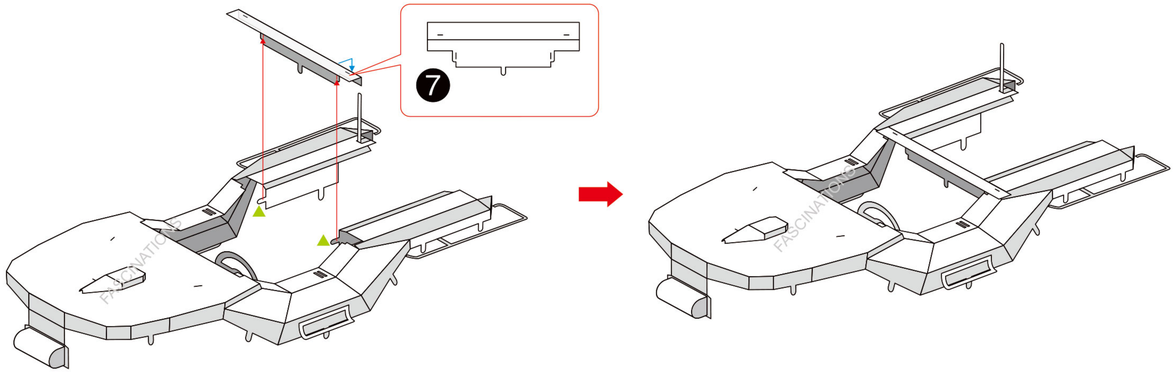
7

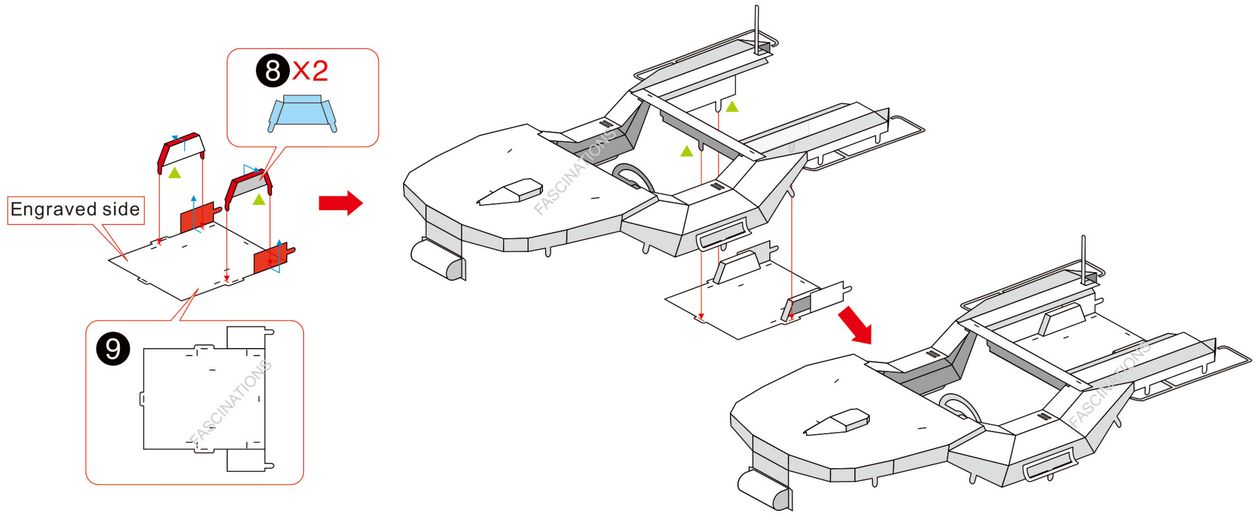
8 X2
Engraved side
9

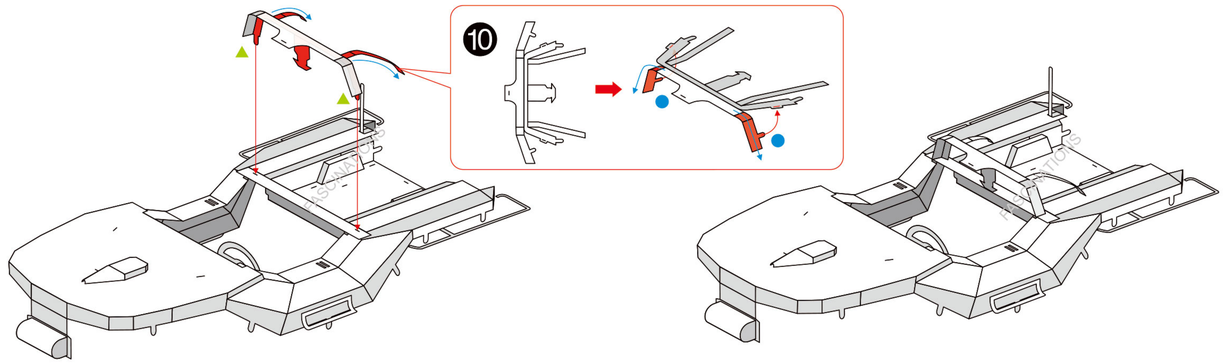
10

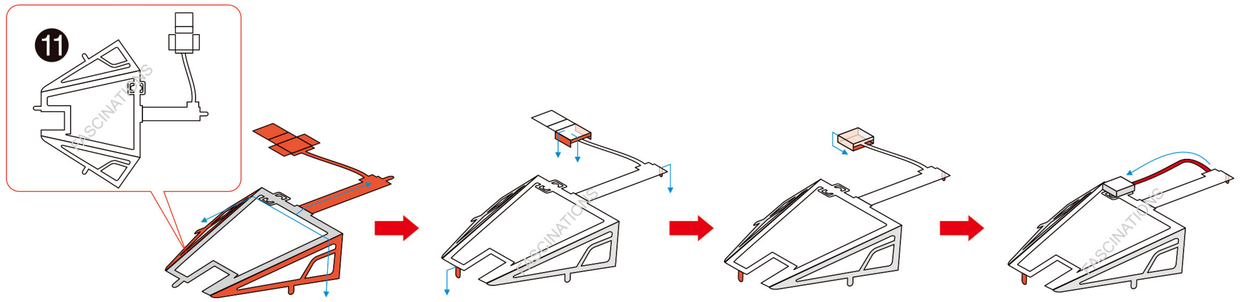
11

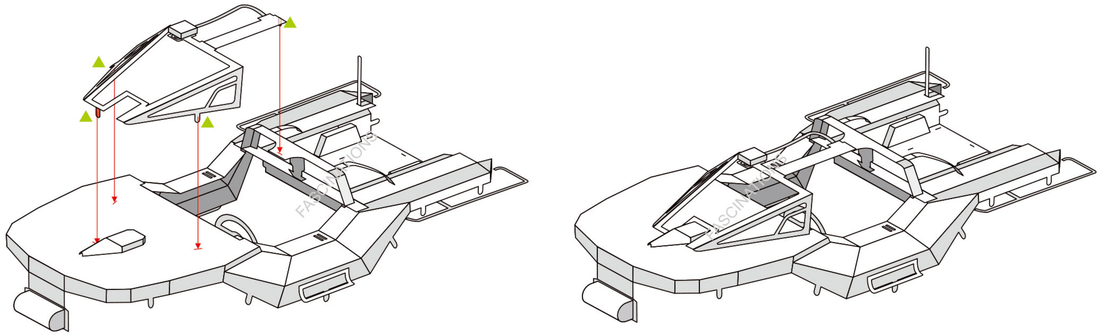

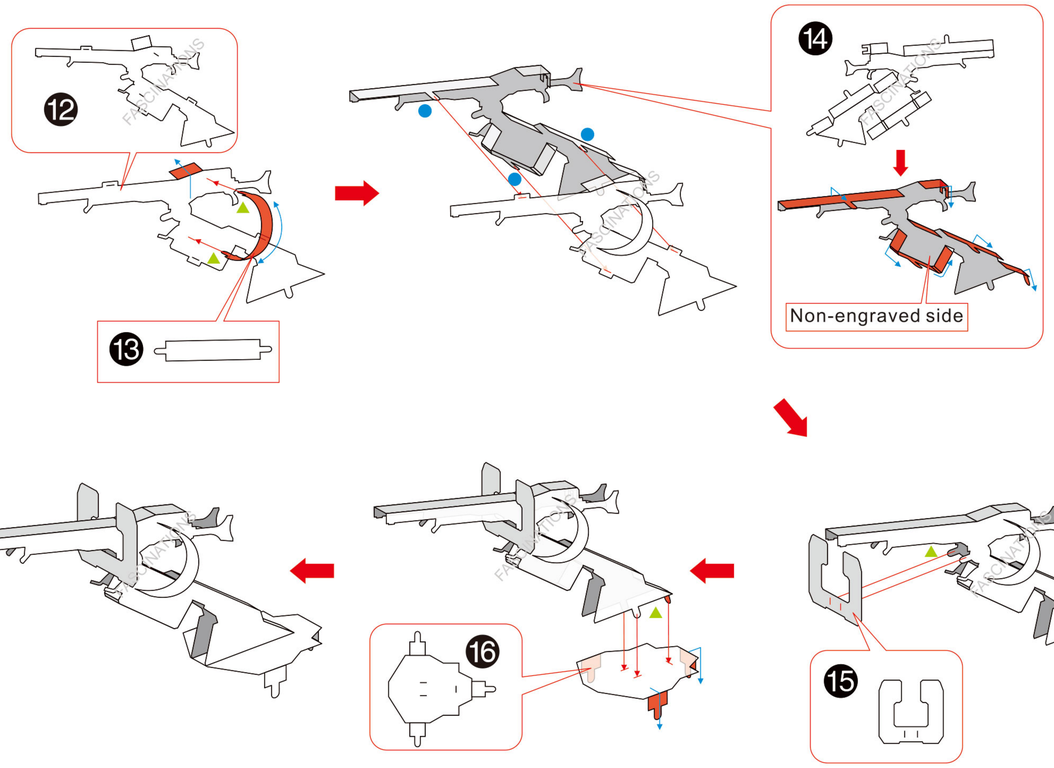
12
13
14
Non-engraved side
15
16

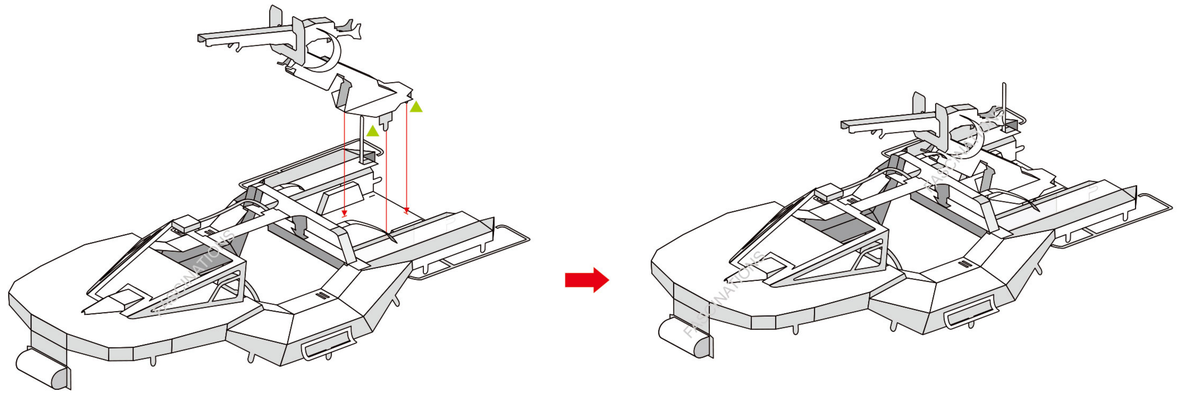

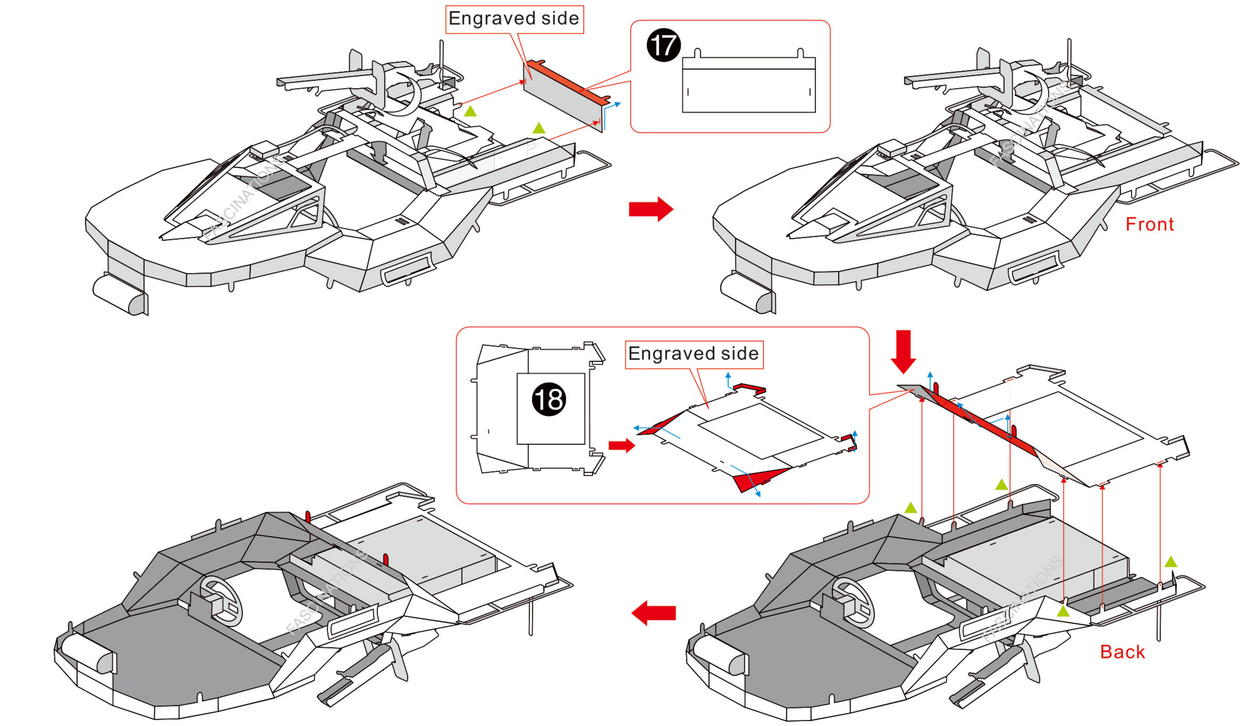
Engraved side
17
Front
18
Engraved side
Back

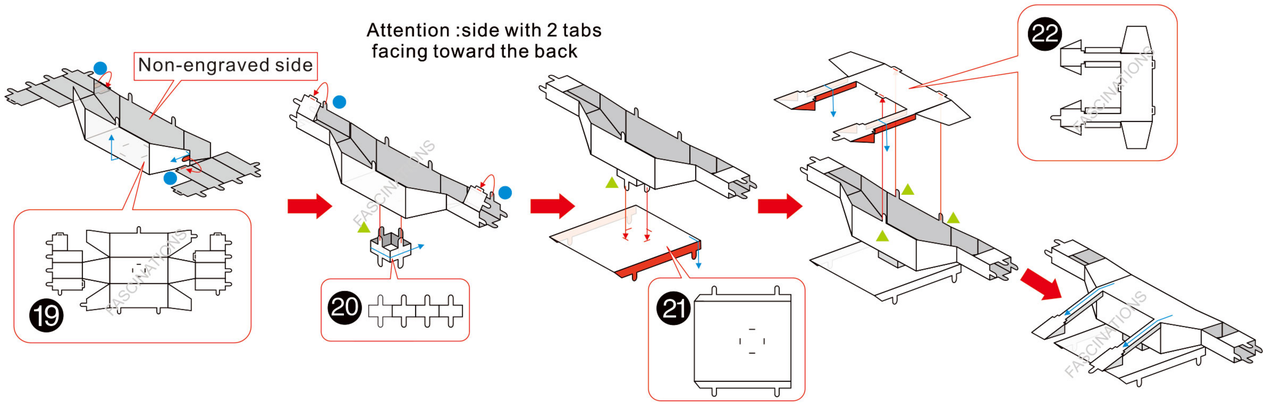
Attention :side with 2 tabs
facing toward the back
Non-engraved side
19
20
21
22

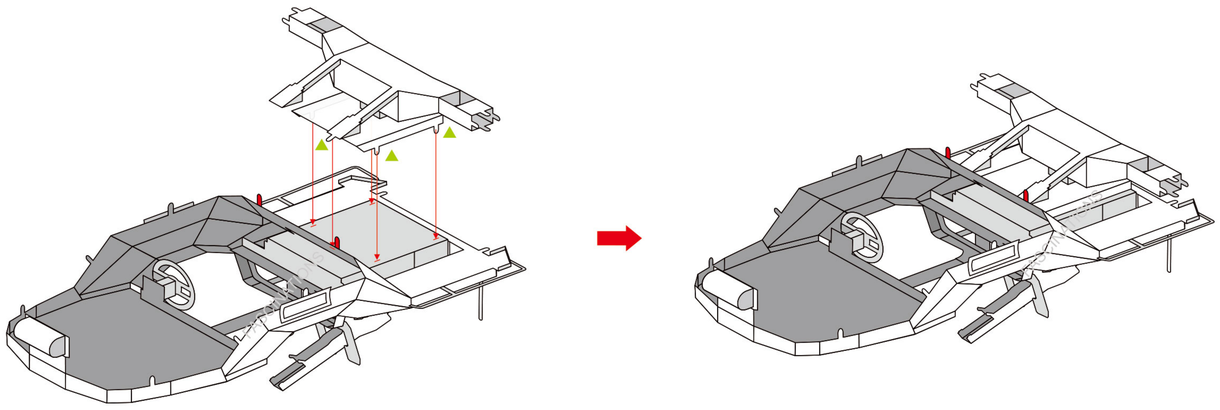

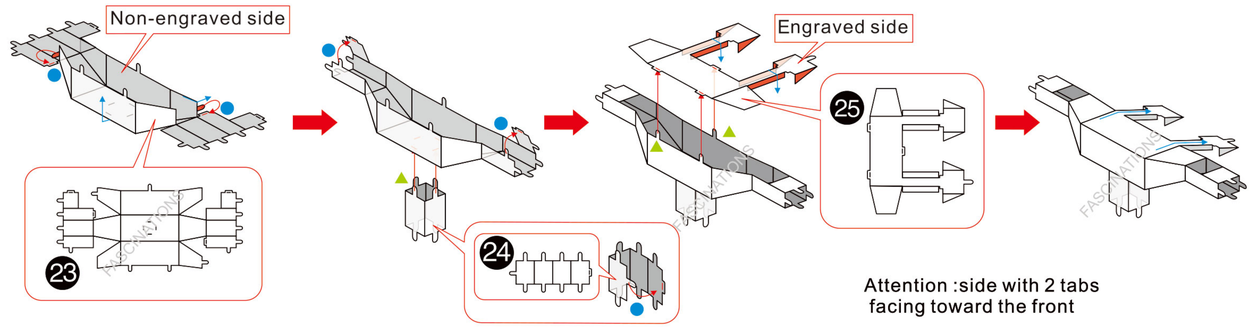
Non-engraved side
23
24
Engraved side
25
Attention :side with 2 tabs
facing toward the front

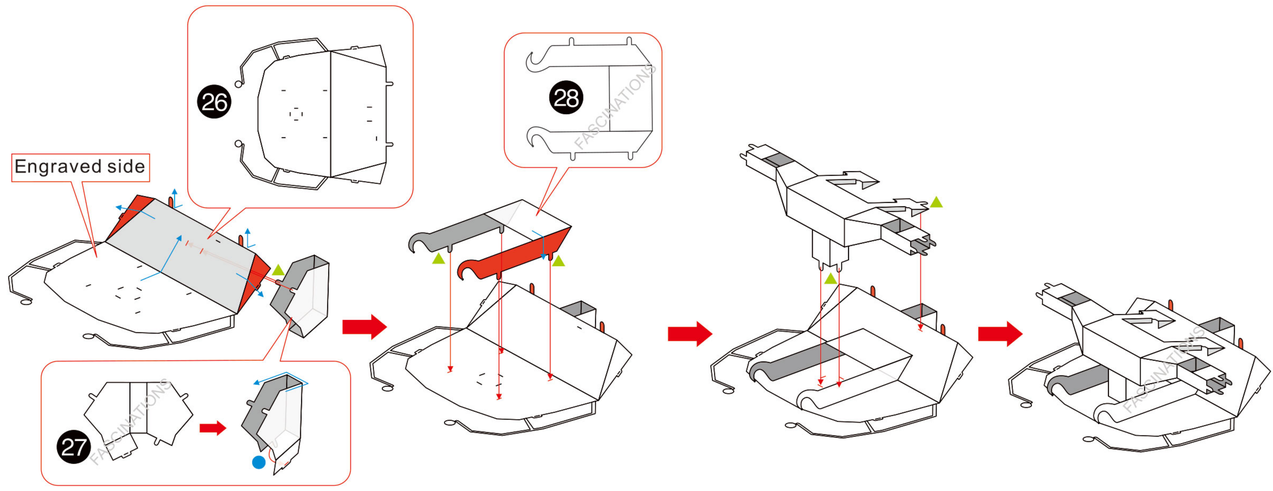
26
28
Engraved side
27

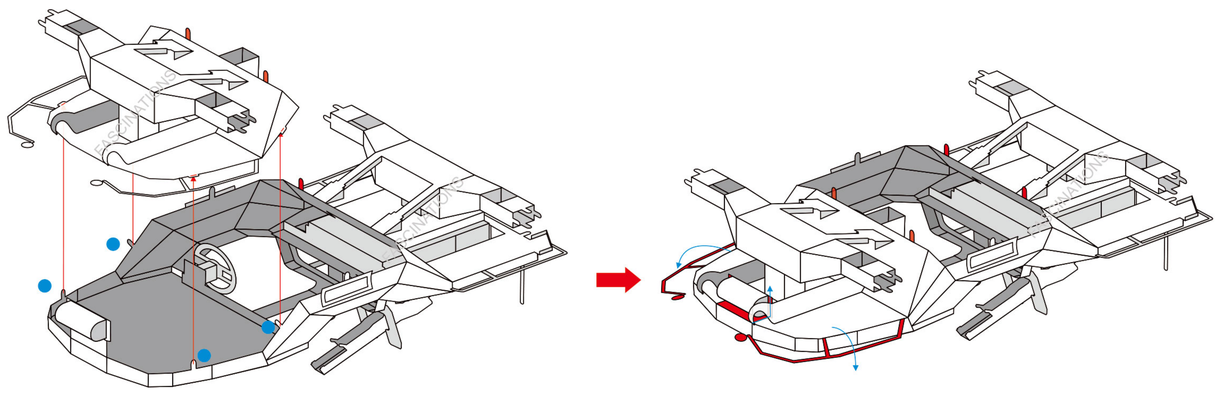

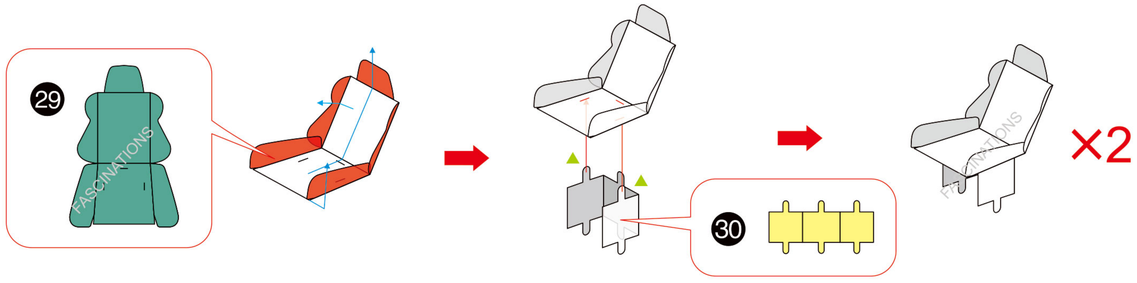
29
30
×2

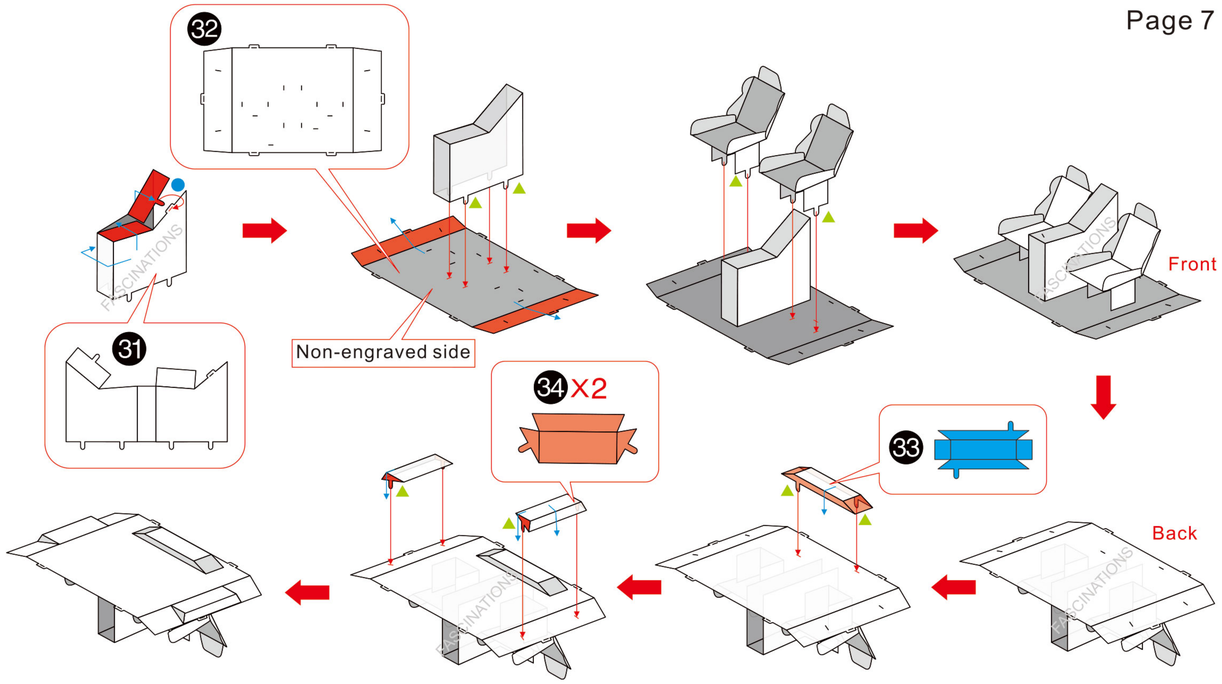

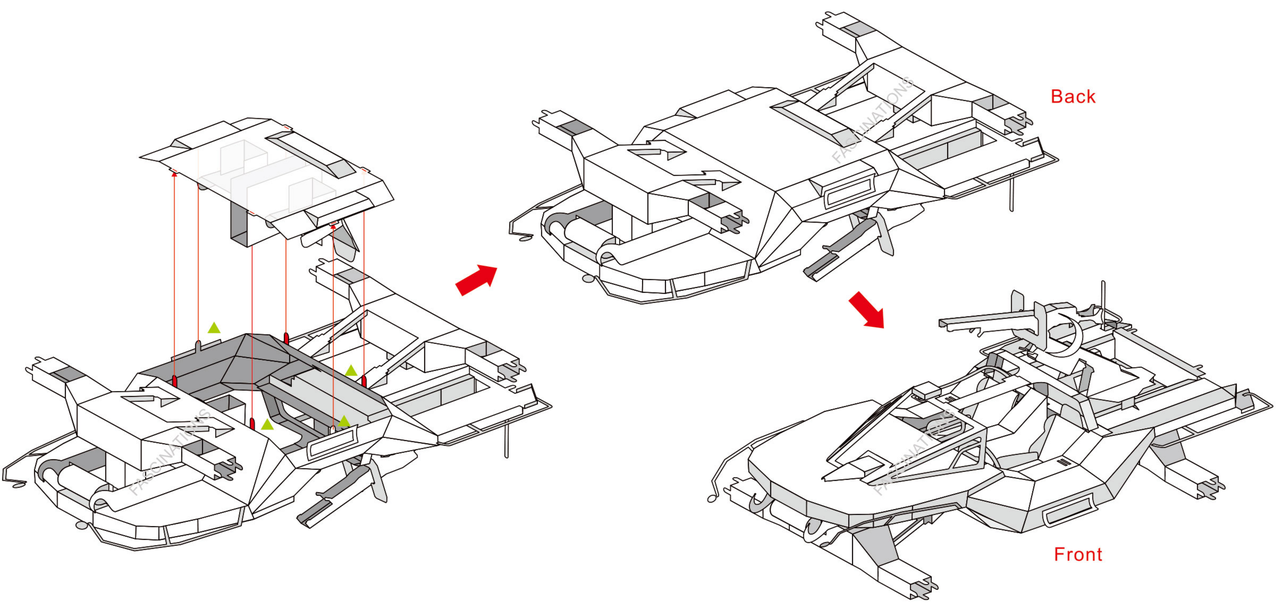

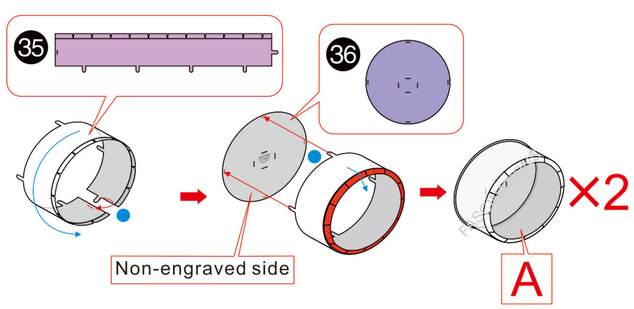

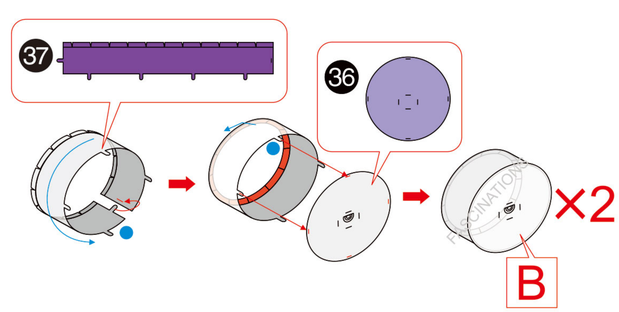

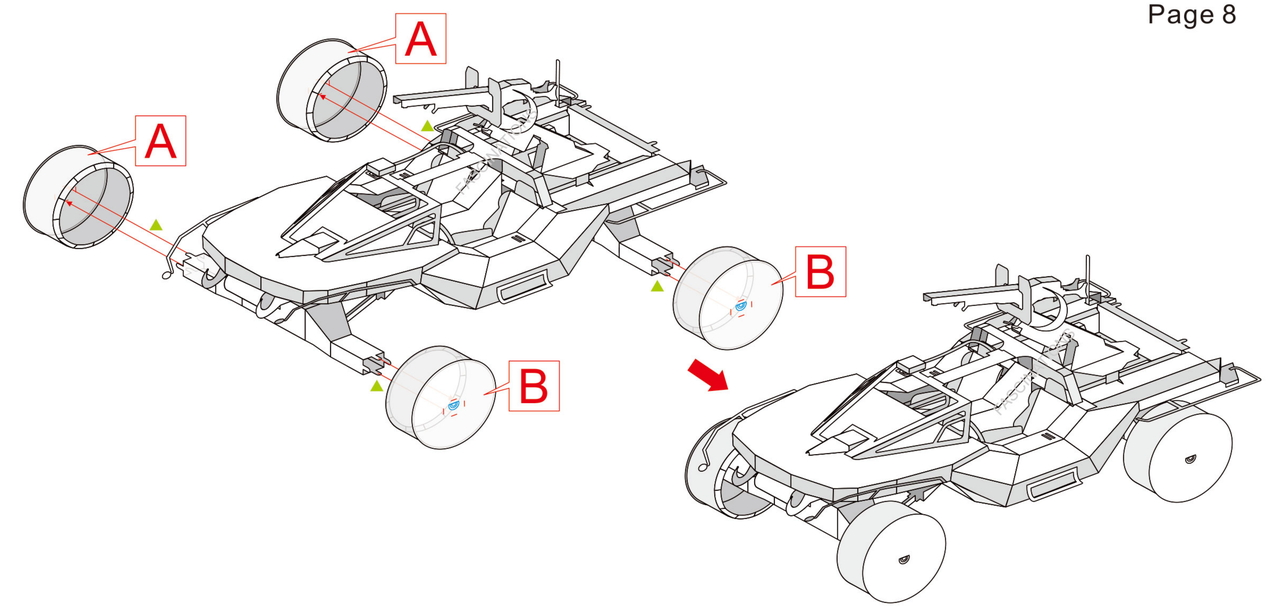

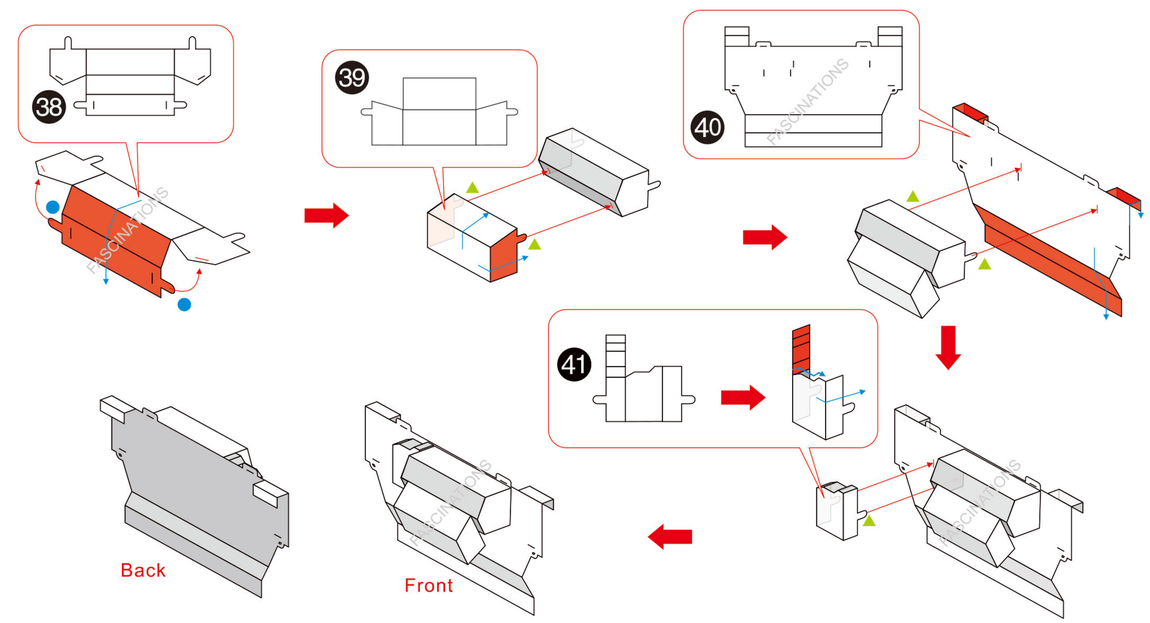

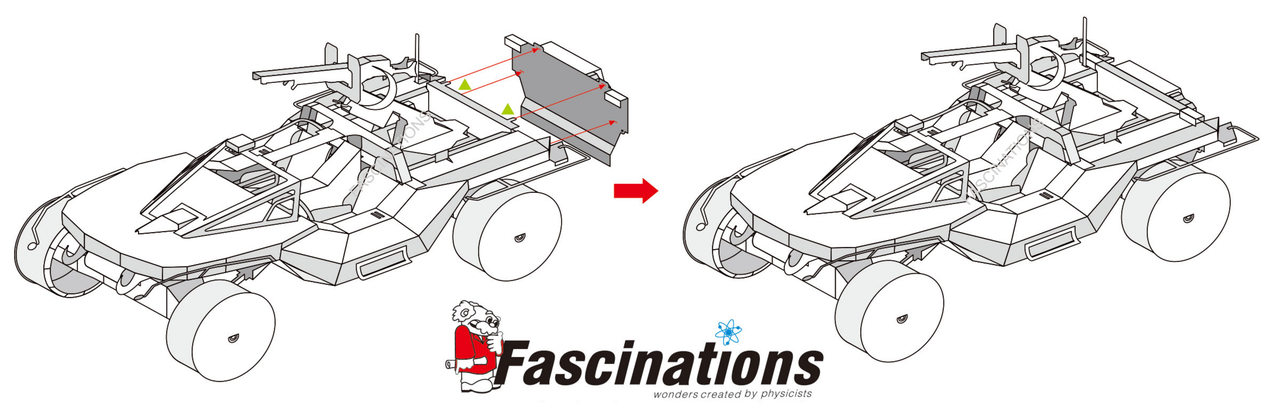

Fascinations
wonders created by physicists
www.fascinations.com/metalearth
© 2015,Fascinations Seattle,WA