ICONX

Metal Earth
3D METAL MODEL KITS

360° view

It is highly recommended that you visit
www.metalearth.com/360/icx019
to see the completed model before assembling your own

METAL SHEETS

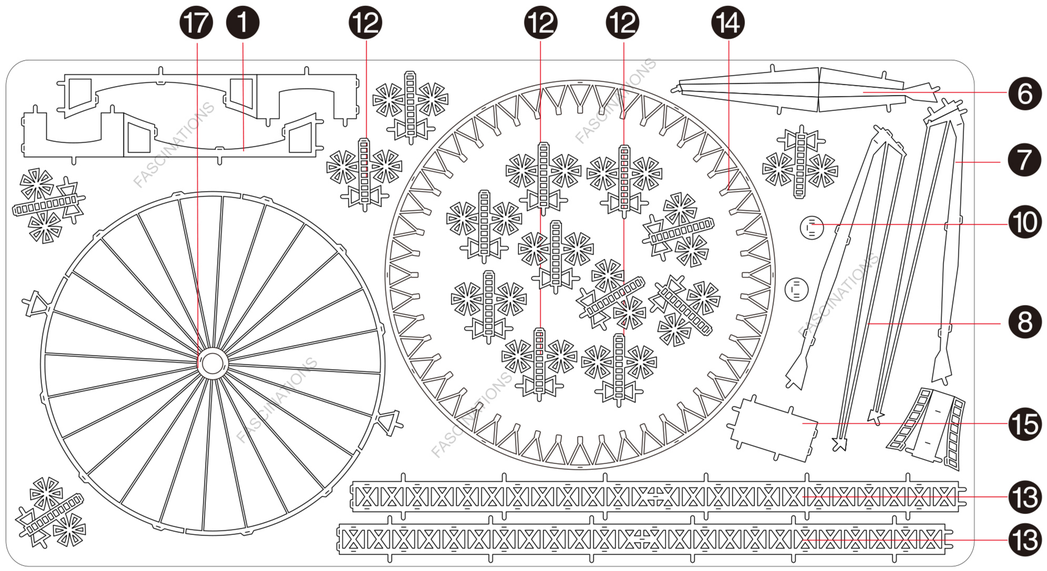

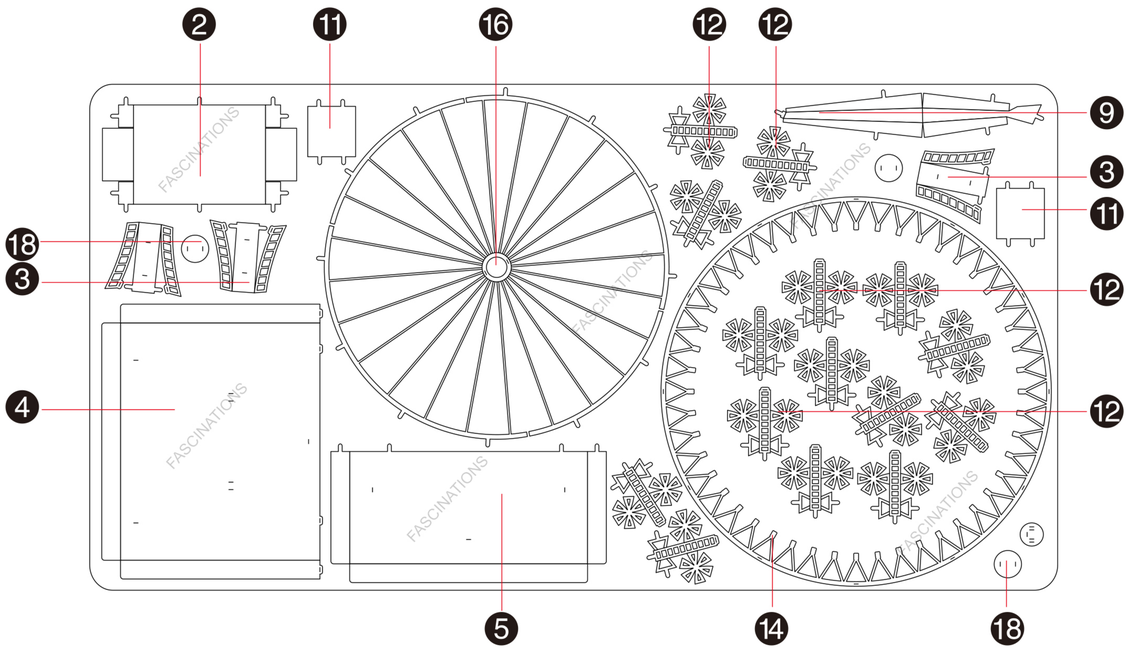

In order to avoid possible injury from sharp edges, please carefully discard the metal sheet after parts have been removed.

Go to www.metalearth.com/360/icx019to see the zoomable PDF version of this instruction sheet

ICX019

London Eye

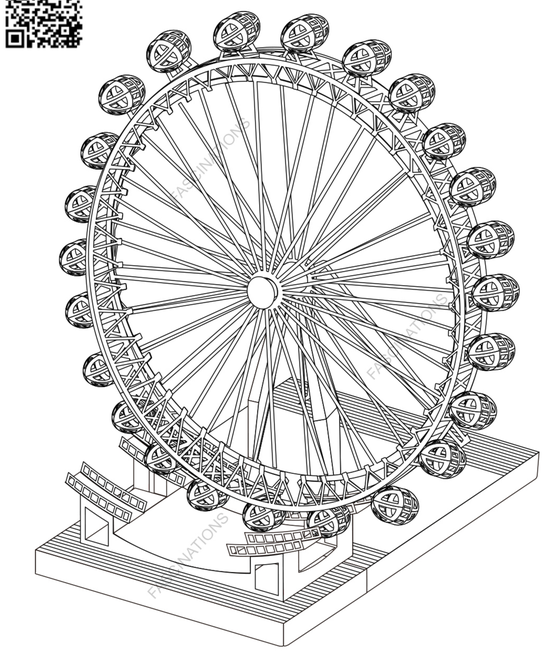

TO CREATE THE BEST CONNECTIONS

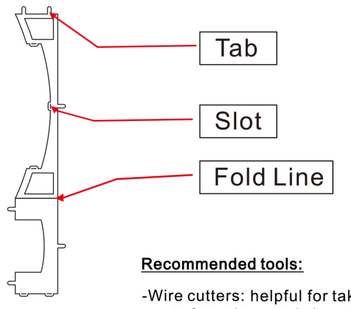

Legends:

- E — Engraved side
- NE — Non-engraved side
- Attention point
- Insert tab and bend 90 degrees
- Insert tab and twist 90 degrees

Assembly tip:

If needed, slightly twist tabs to hold parts together then untwist and bend them down for a nice finish

Recommended tools:

-Wire cutters: helpful for taking parts from the metal sheets.

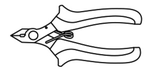

-Tweezers or needle nose pliers: helpful for folding parts, bending and twisting tabs.

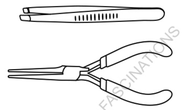

ASSEMBLY STEPS

Step 1

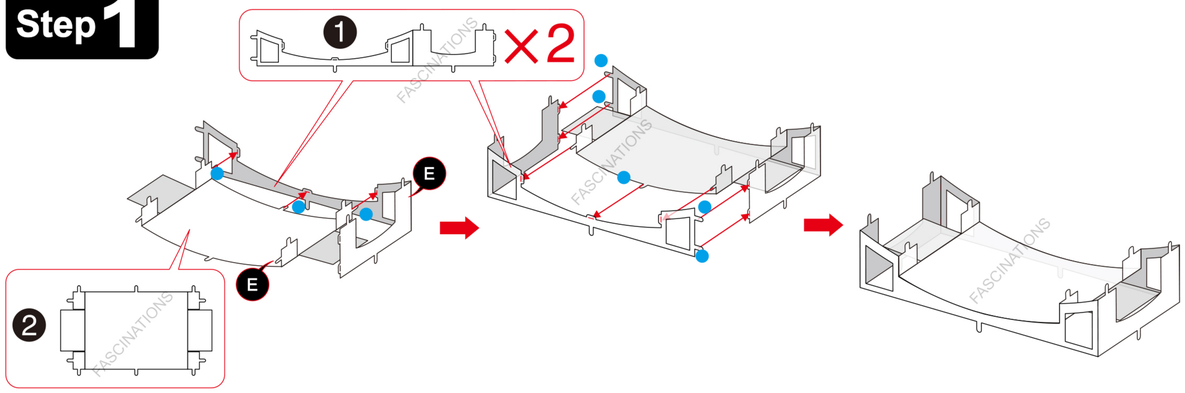

Step 2

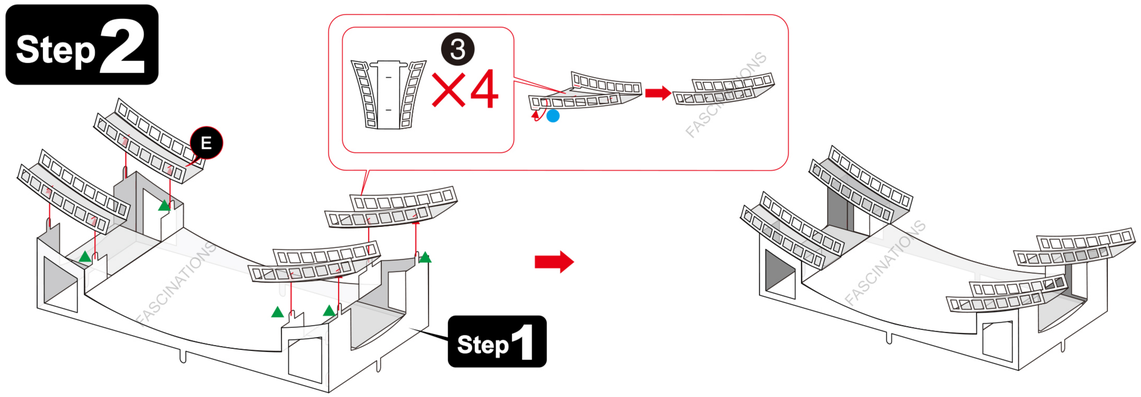

Step 3

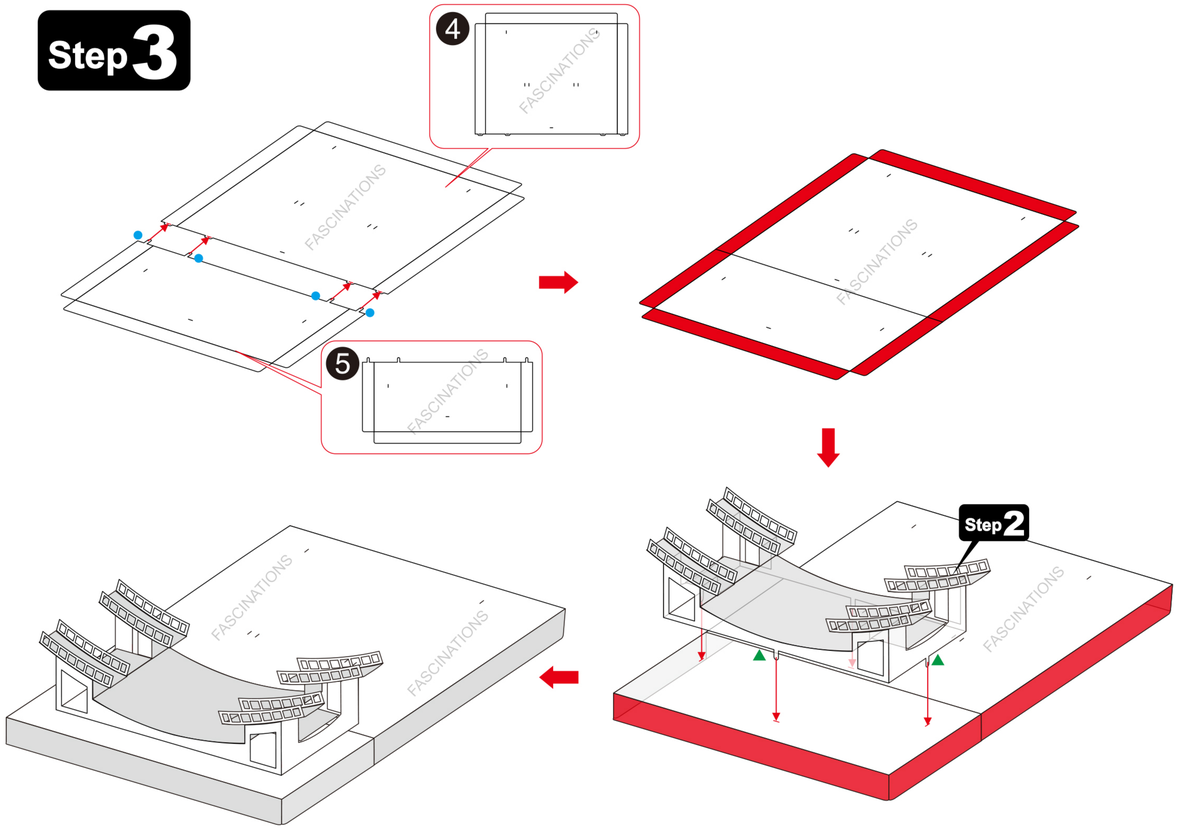

Step 4

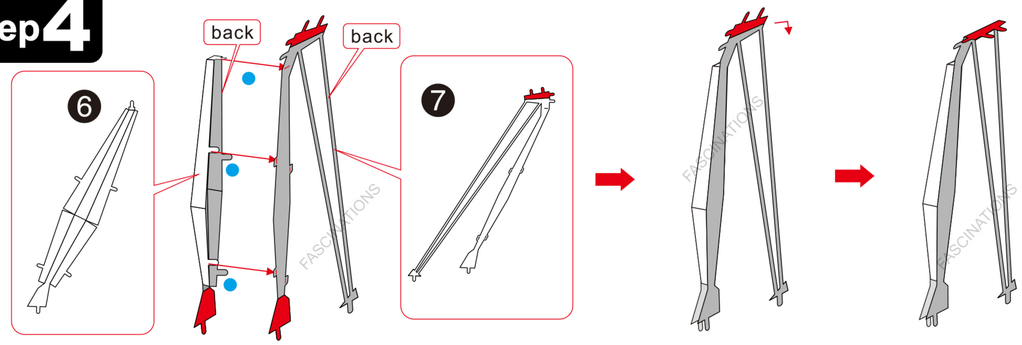

Step 5

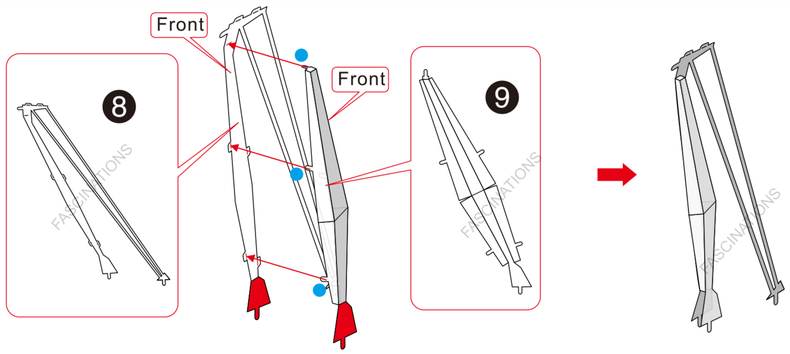

Step 6

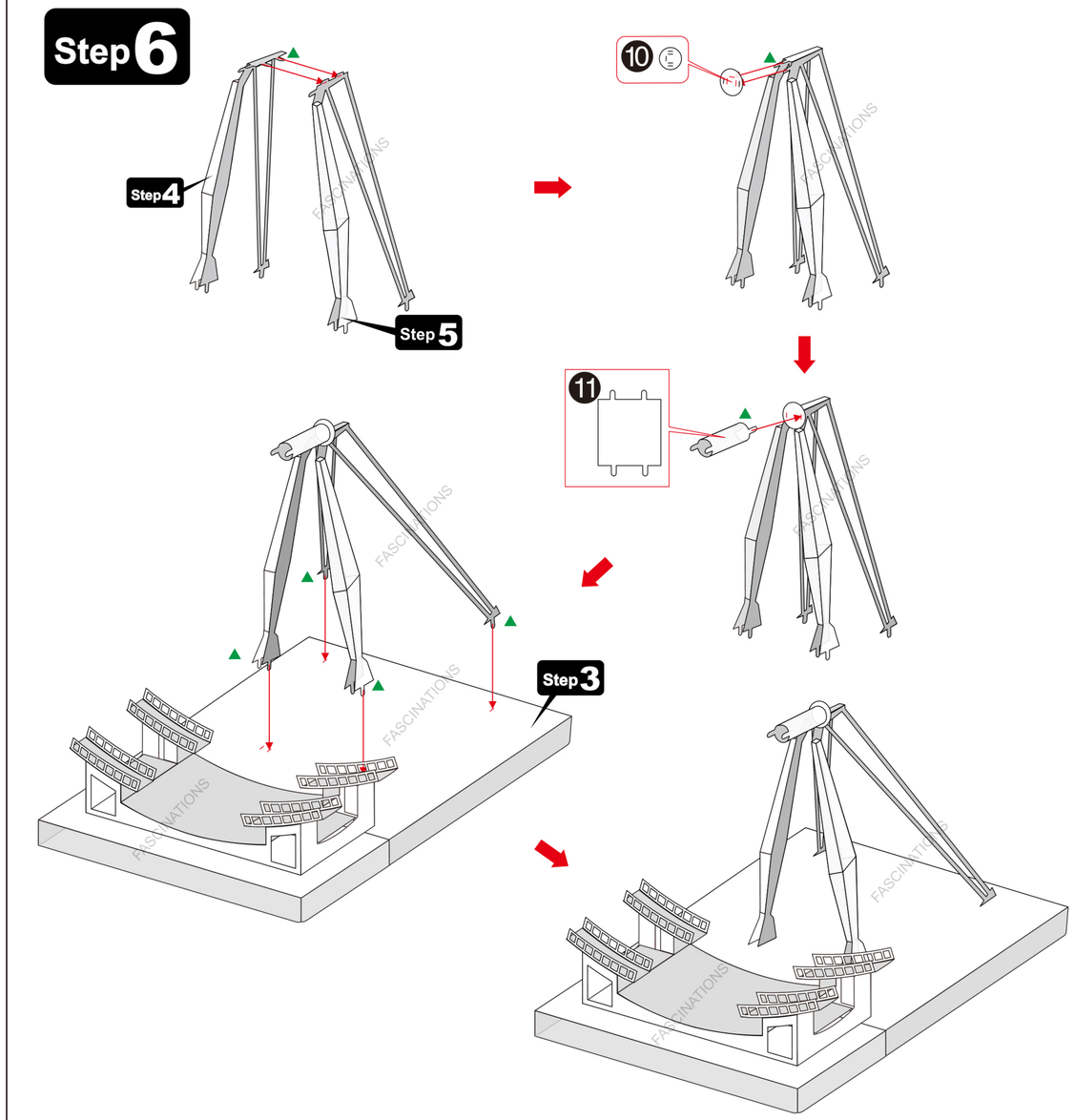

Step 7

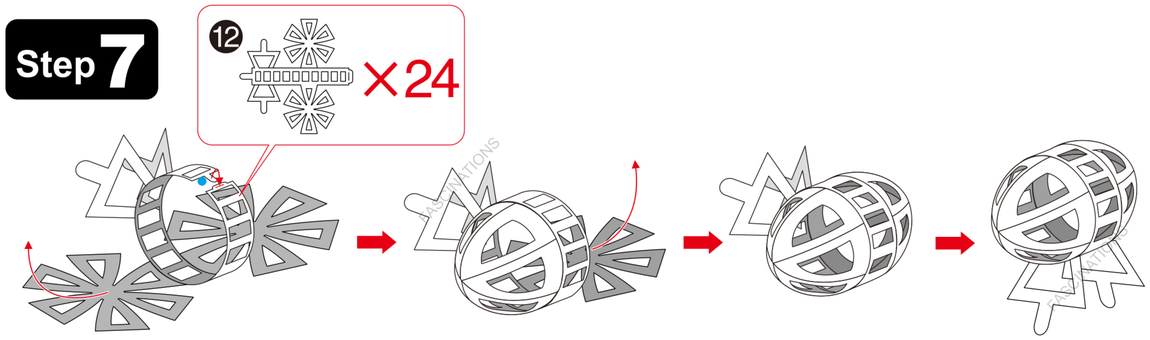

Step 8

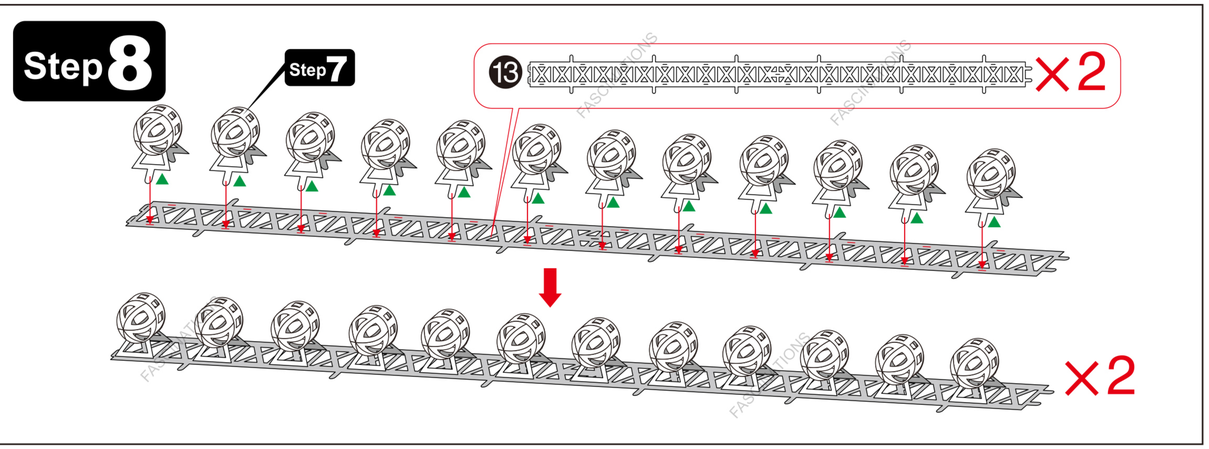

Step 9

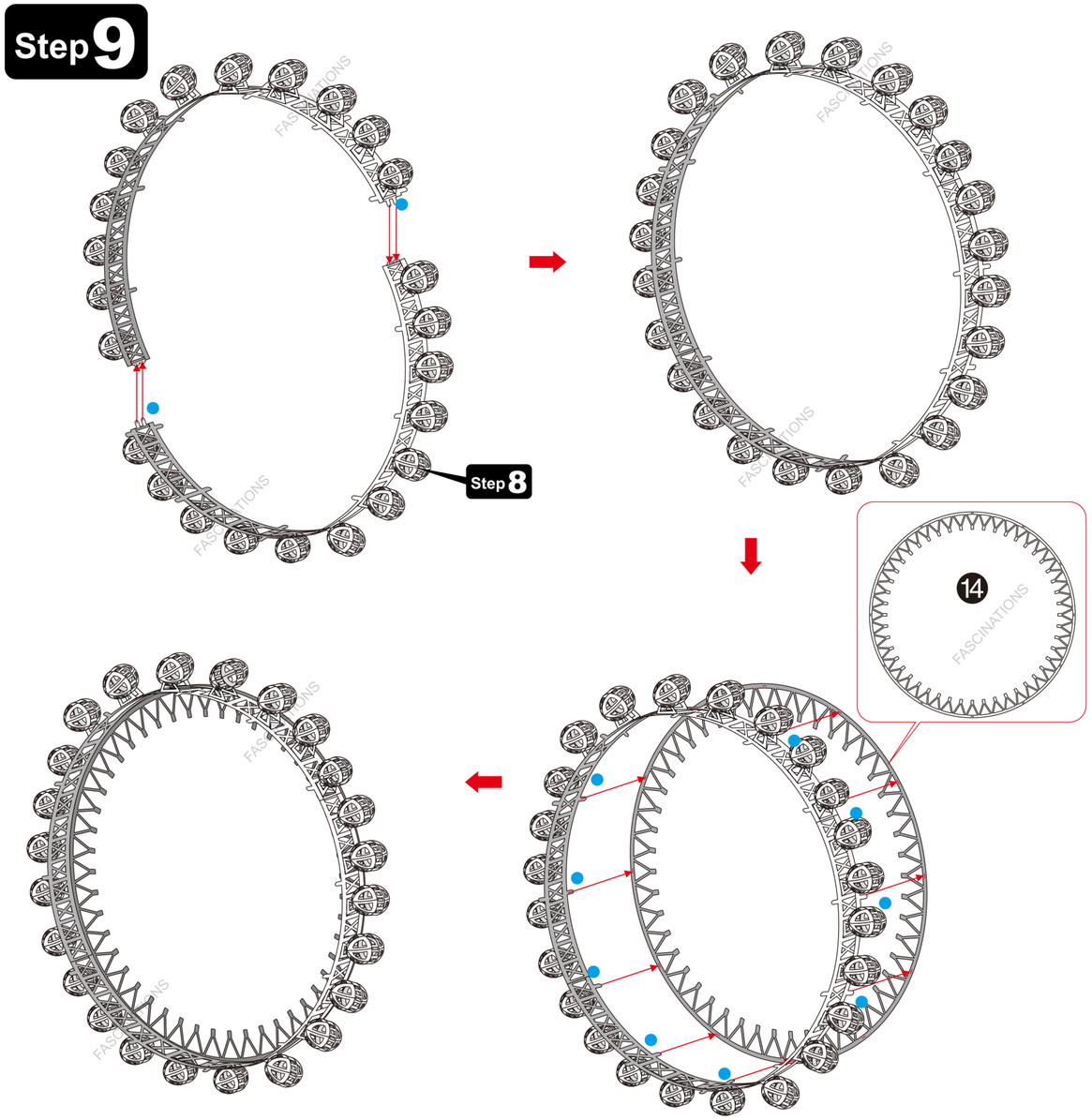

Step 10

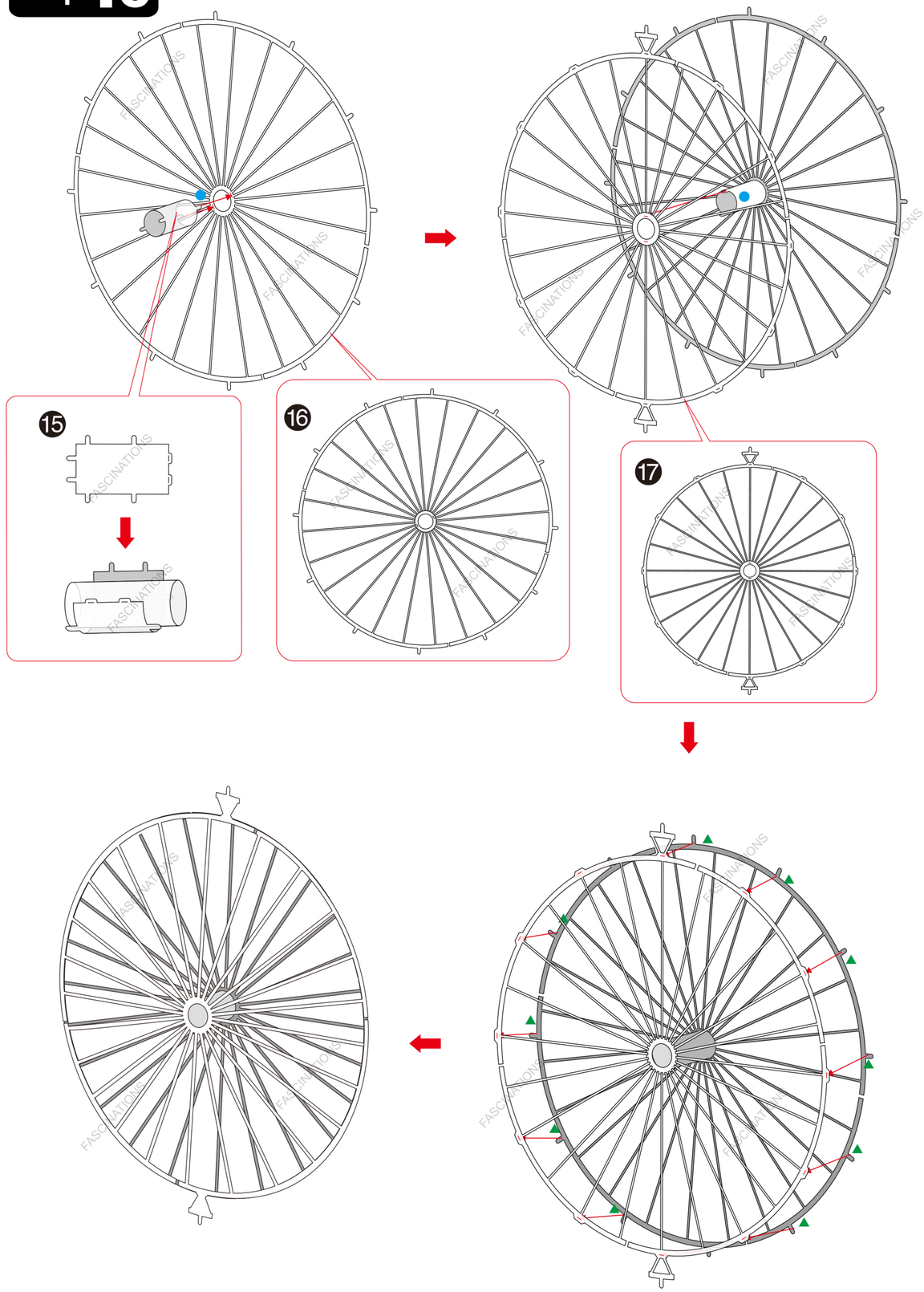

Step 11

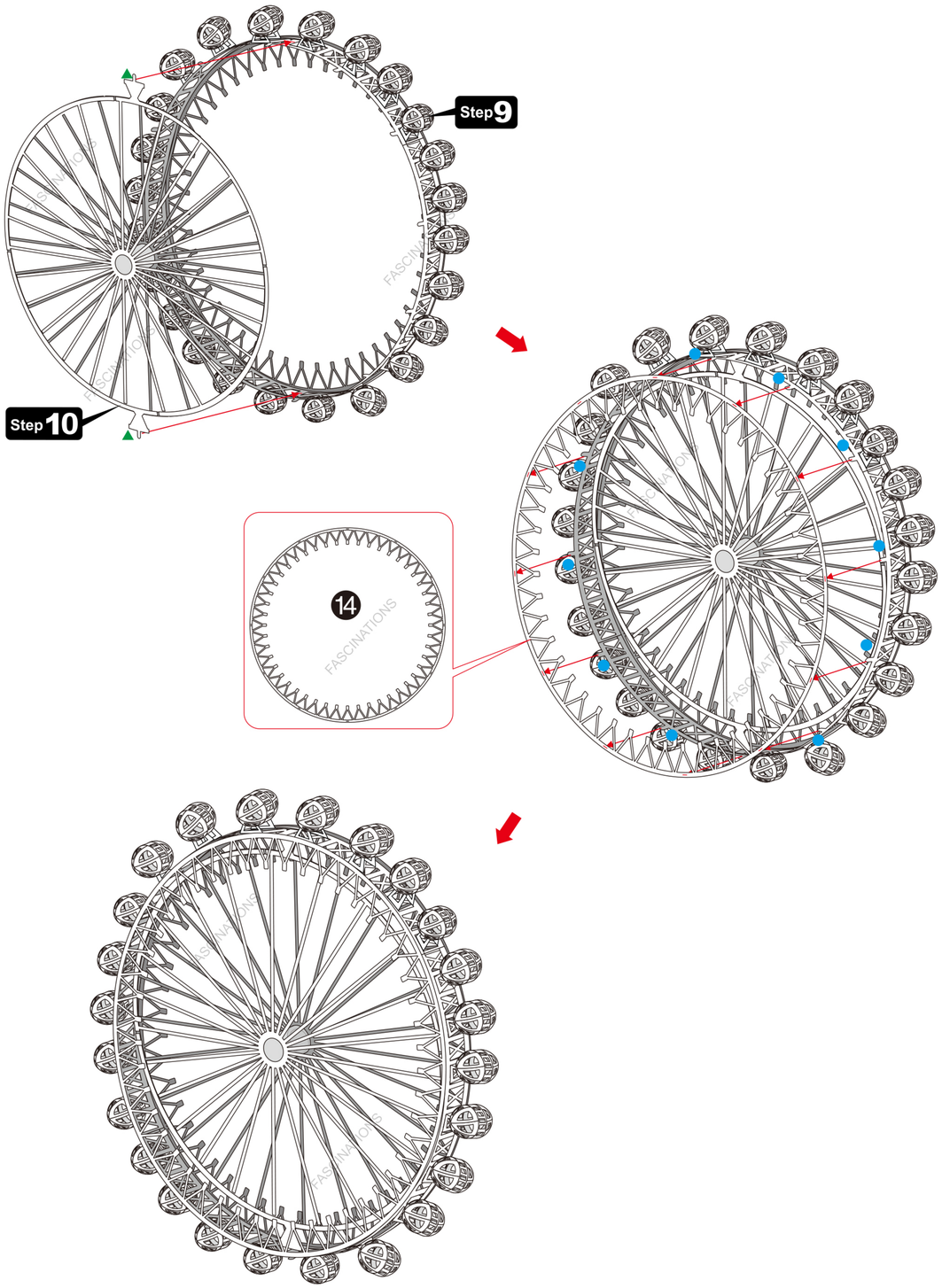

Step 12

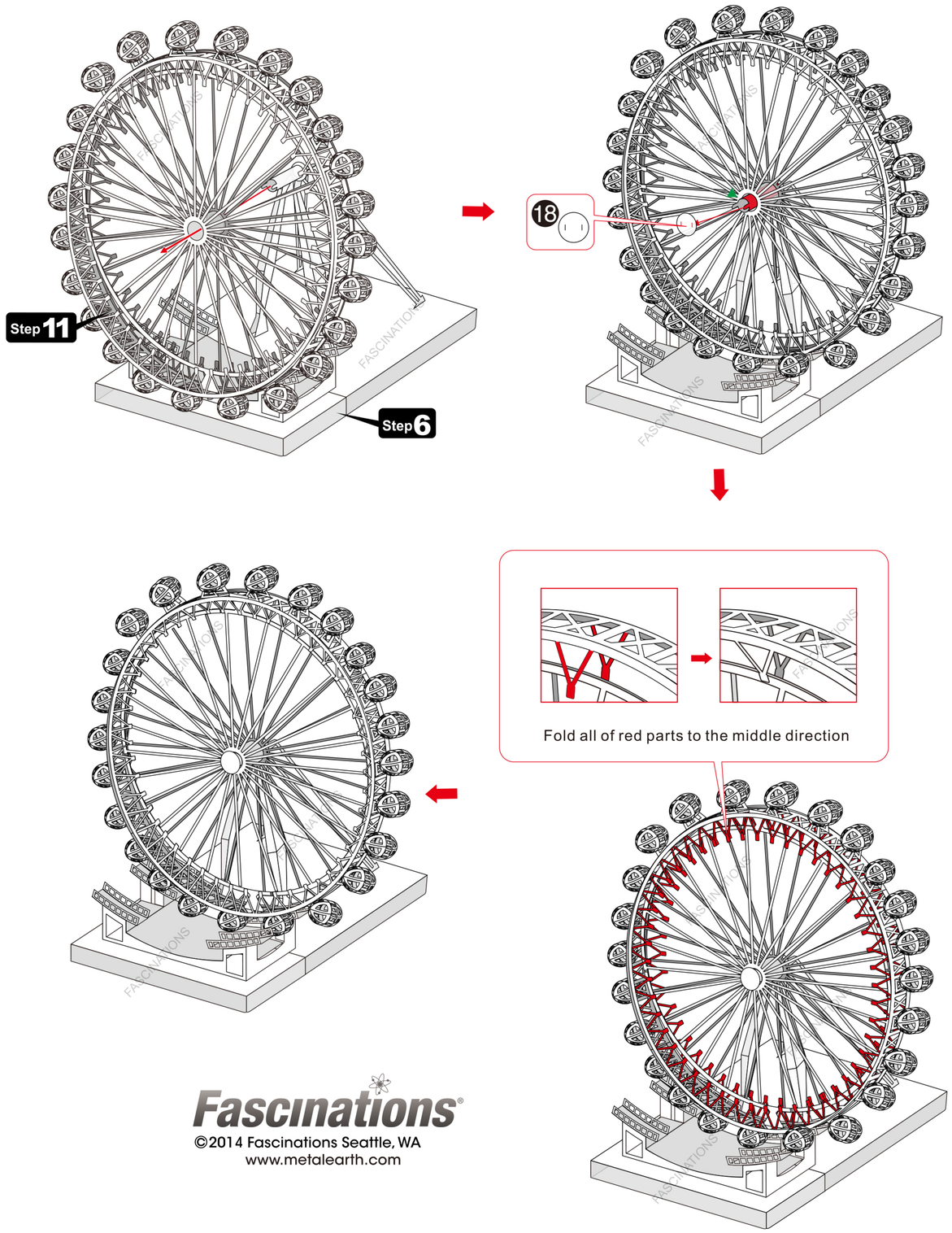

Fascinations®

©2014 Fascinations Seattle, WA

www.metalearth.com