METAL EARTH®

3D METAL MODEL KITS

360° view

It is highly recommended that you visit
www.fascinations.com/metalearth360/mms294
to see the completed model before assembling your own

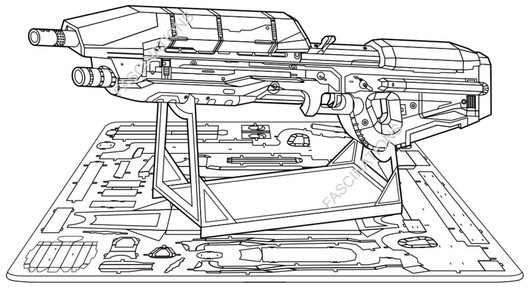

mms294

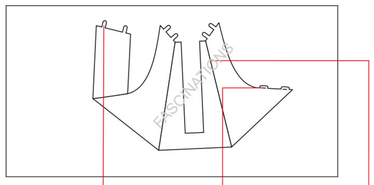

Insertion tabs are inserted and then folded

Insertion holes

Fold lines can be seen as shown here

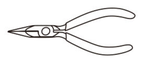

Needle nose pliers are helpful for assembly

Legends:

- E — Engraved side
- NE — Non-engraved side
- Attention point

To create the best connections

- Insert tab and bend 90 degrees for most visible areas
- Insert tab and twist 90 degrees is best in some areas to ensure a tight connection

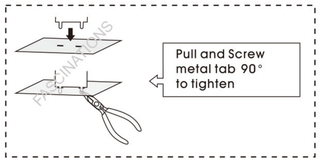

Metal sheets

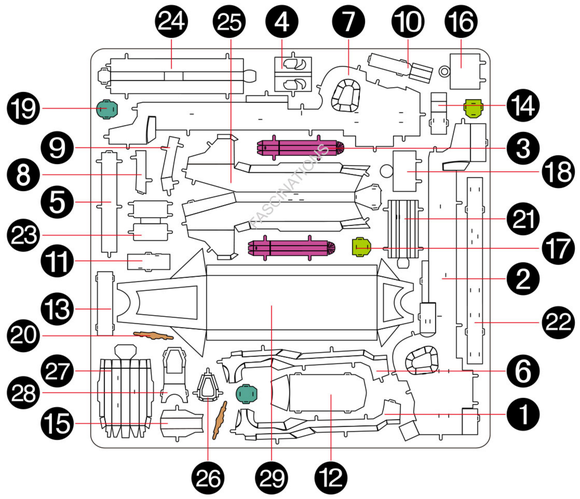

In order to avoid possible injury from sharp edges, please carefully discard the metal sheet after parts have been removed

Assembly Flow Chart

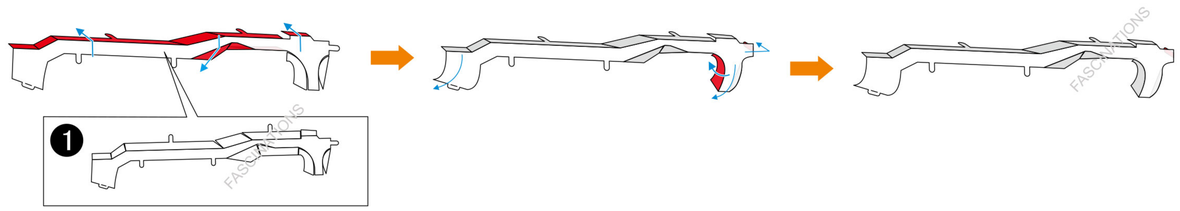

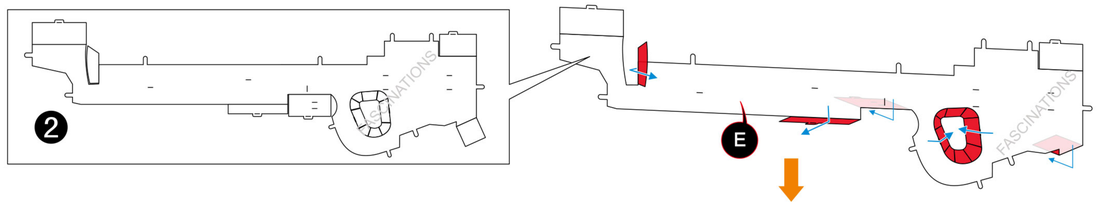

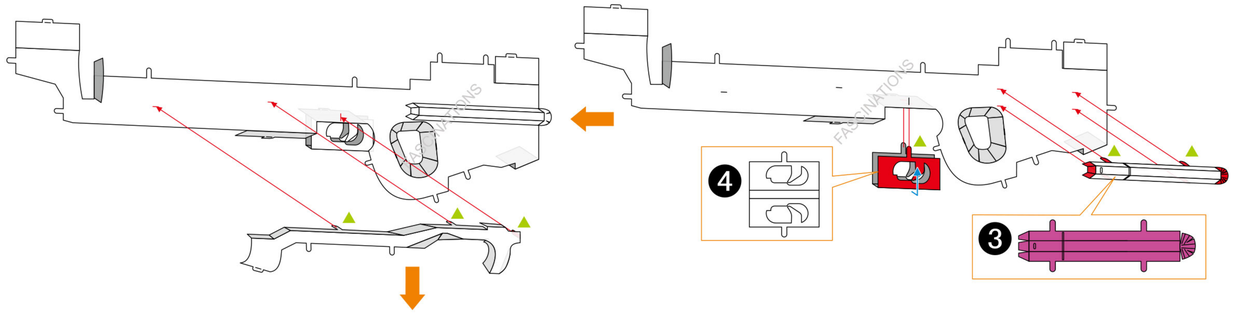

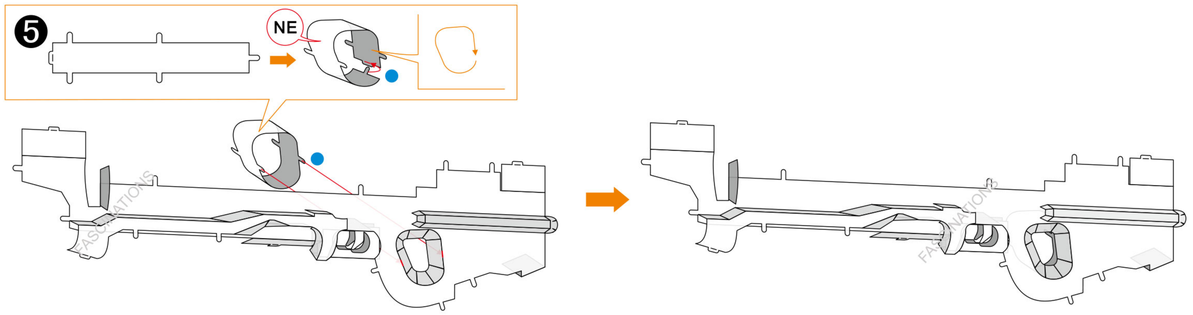

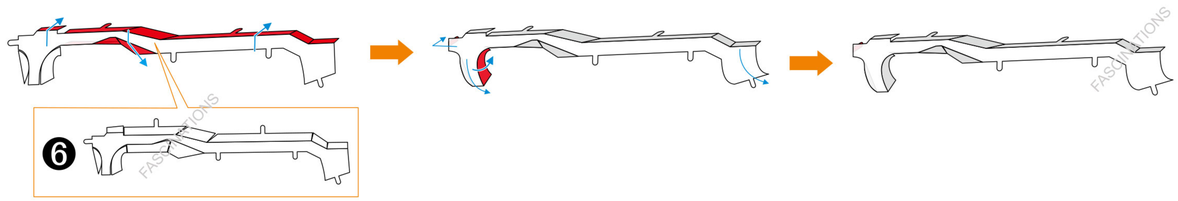

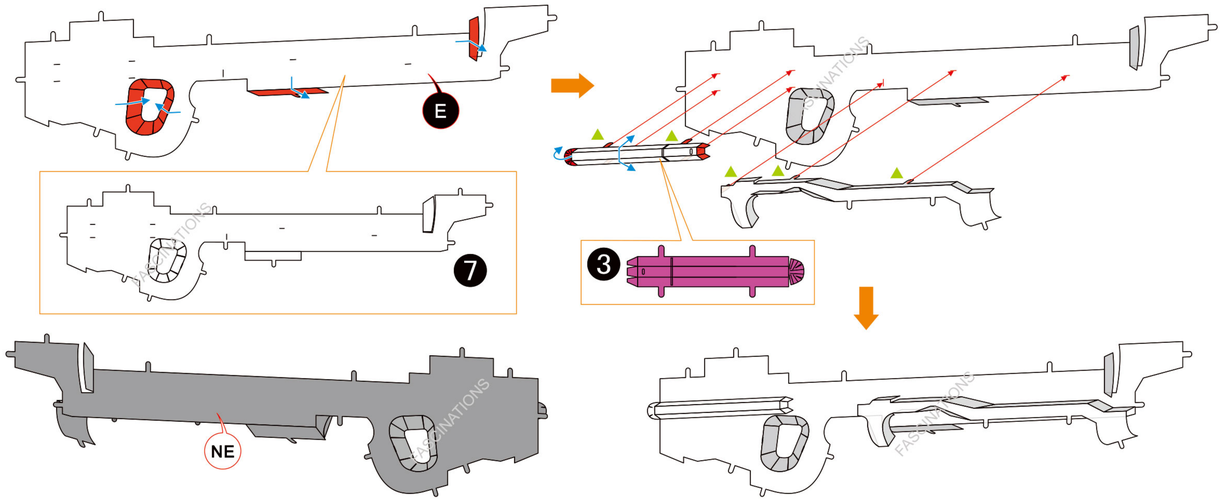

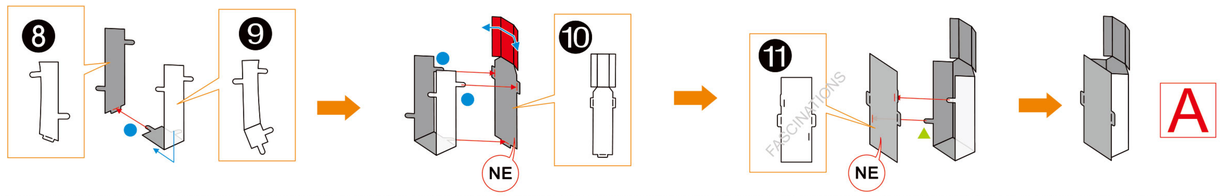

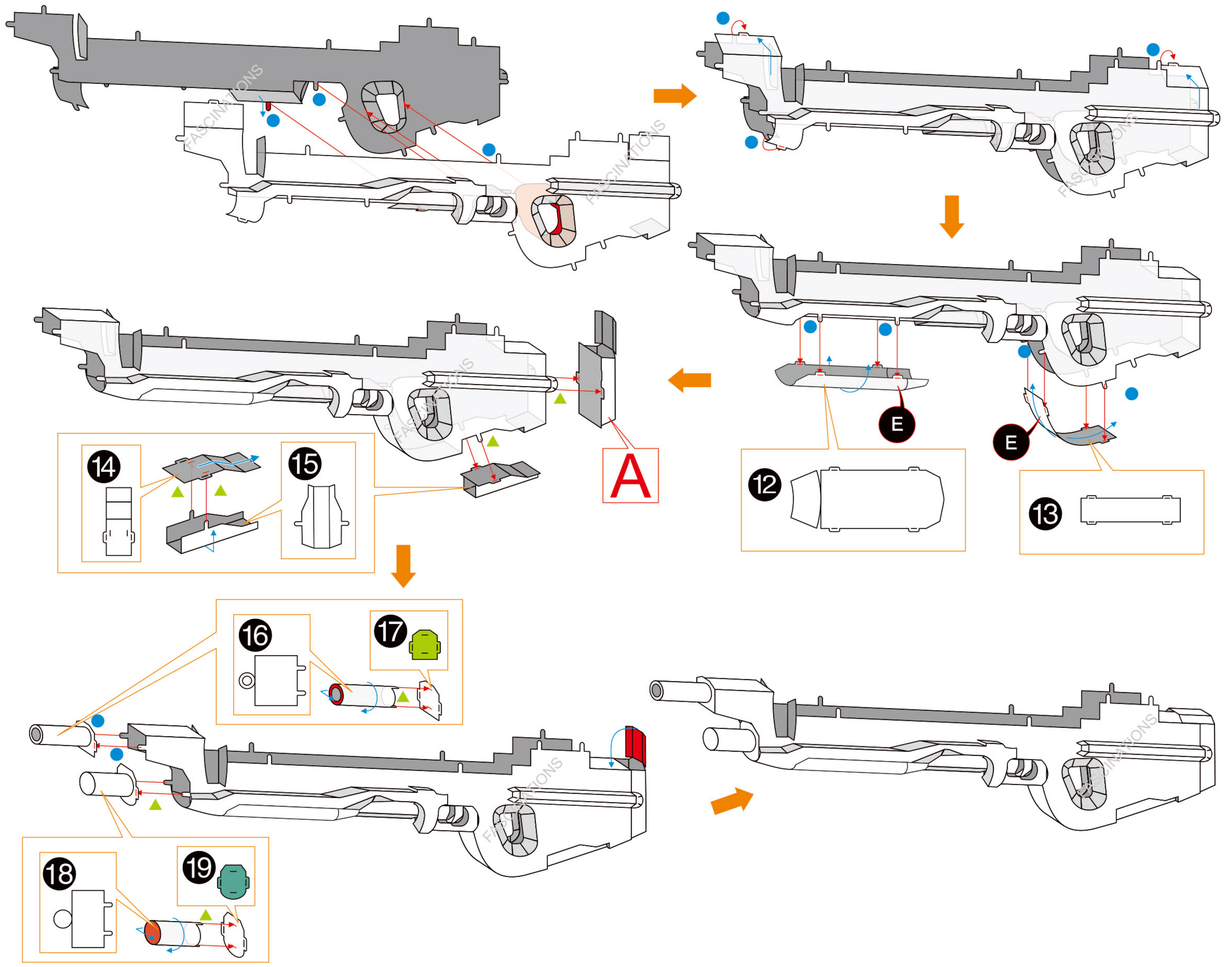

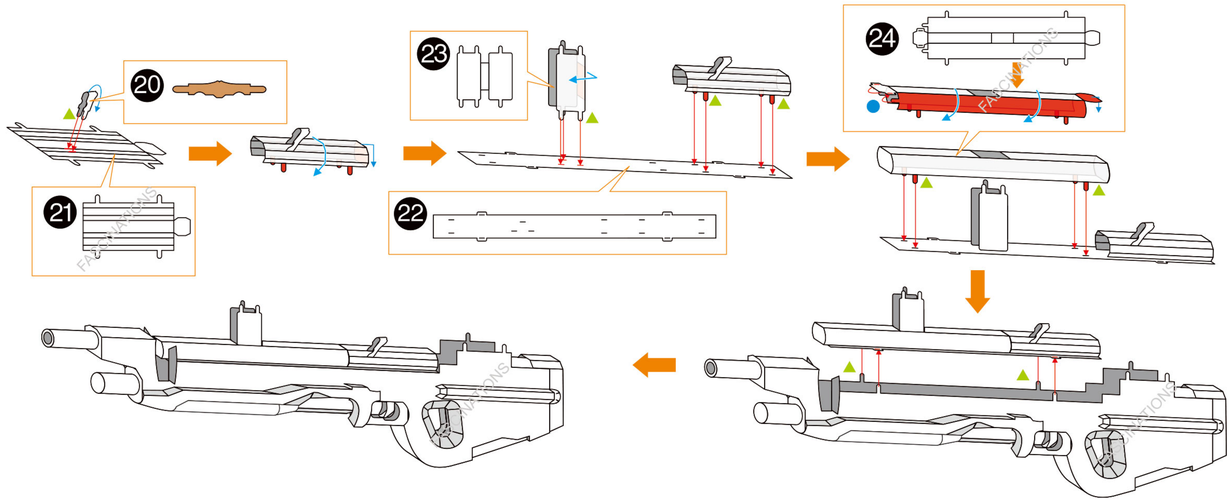

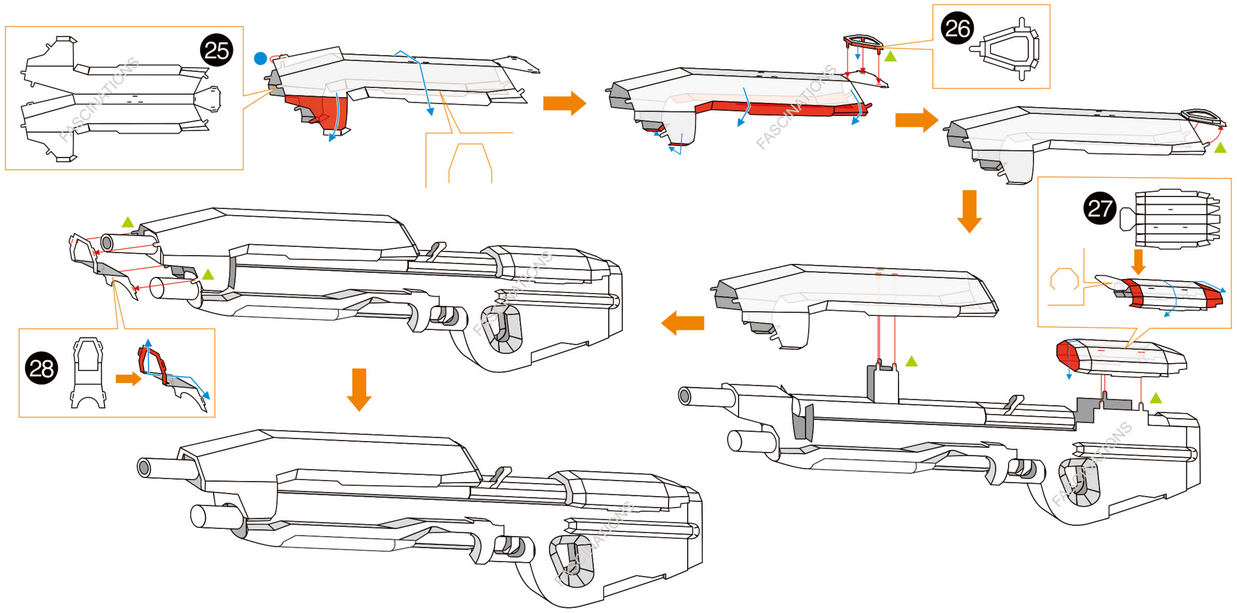

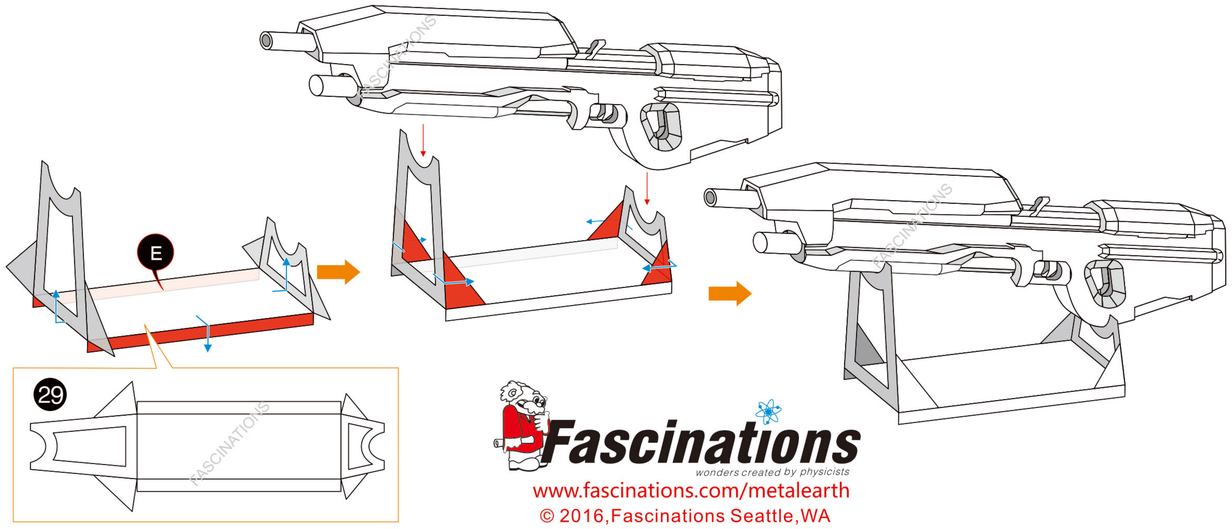

Fascinations
wonders created by physicists
www.fascinations.com/metalearth
© 2016,Fascinations Seattle,WA