METAL EARTH®

3D METAL MODEL KITS

360° view

It is highly recommended that you visit
www.fascinations.com/metalearth360/mms295
to see the completed model before assembling your own

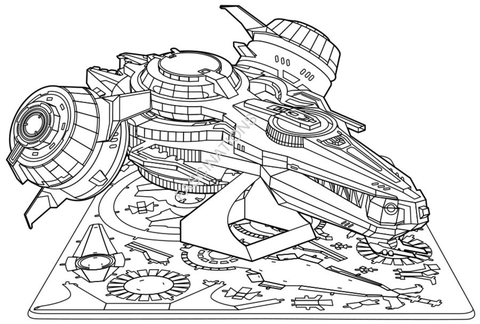

mms295

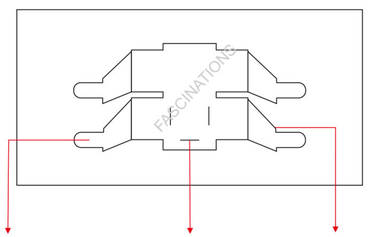

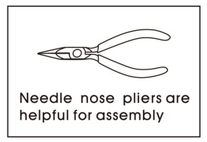

Legends:

- E — Engraved side
- NE — Non-engraved side
- Attention point

To create the best connections

- Insert tab and bend 90 degrees for most visible areas
- Insert tab and twist 90 degrees is best in some areas to ensure a tight connection

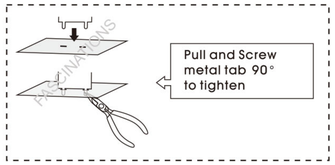

Metal sheets

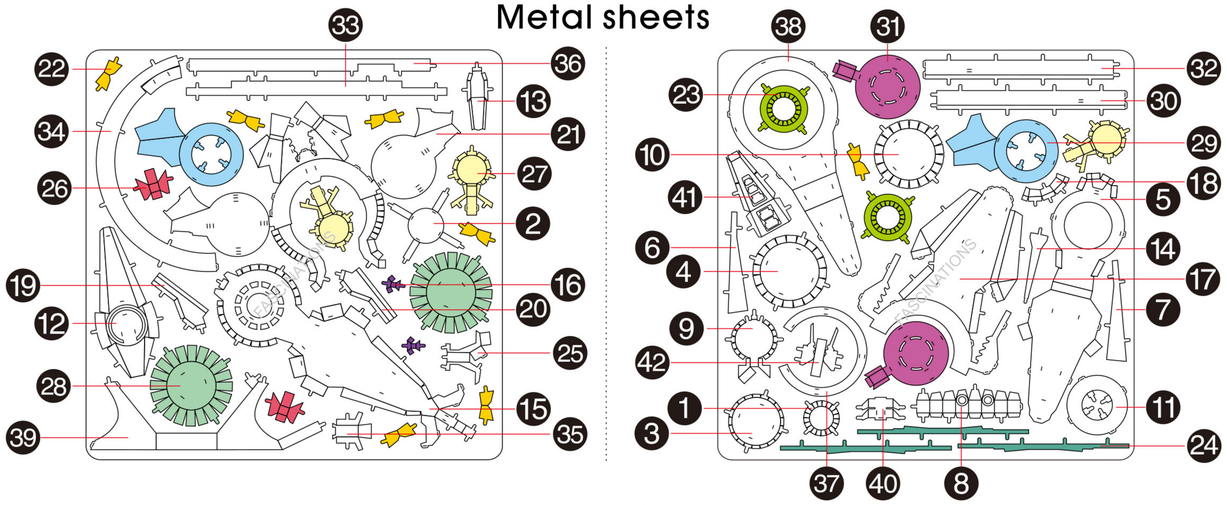

In order to avoid possible injury from sharp edges, please carefully discard the metal sheet after parts have been removed

Assembly Flow Chart

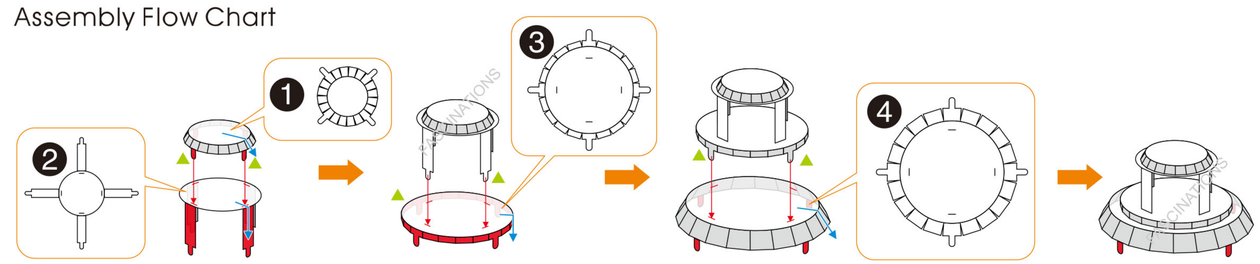

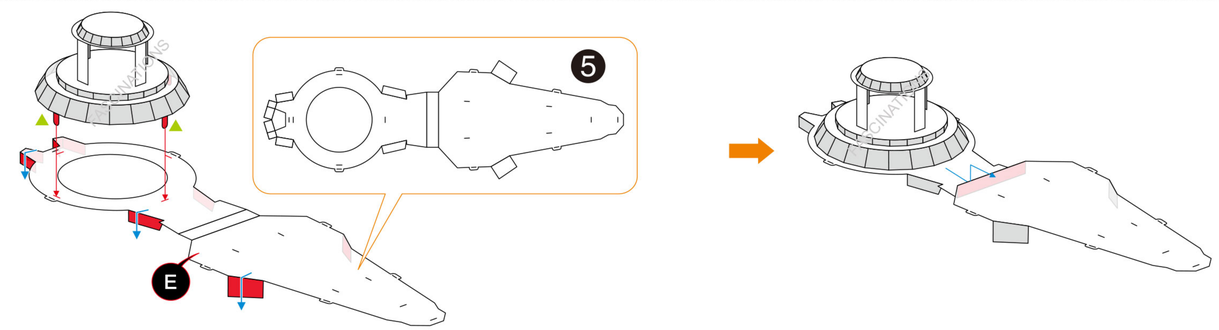

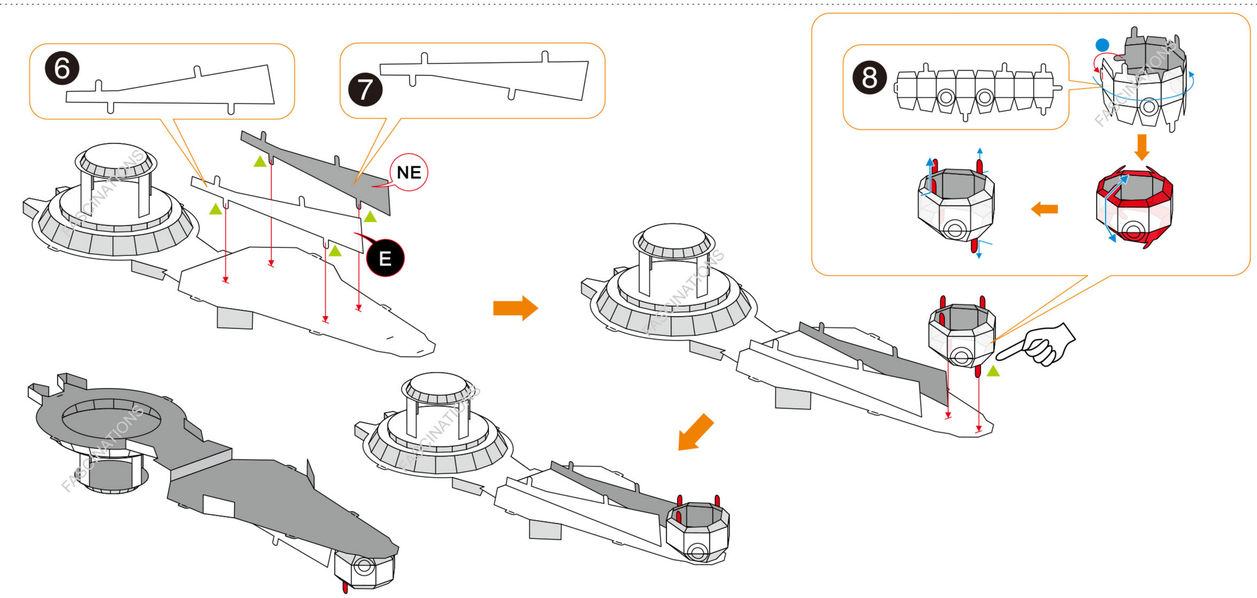

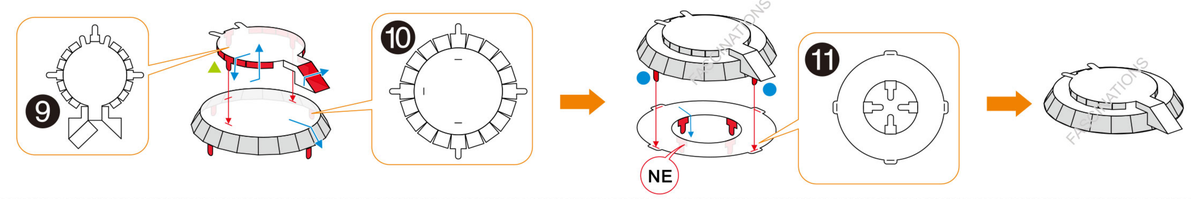

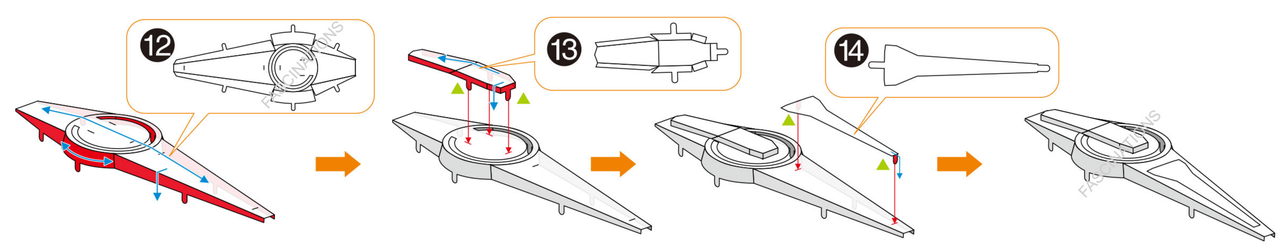

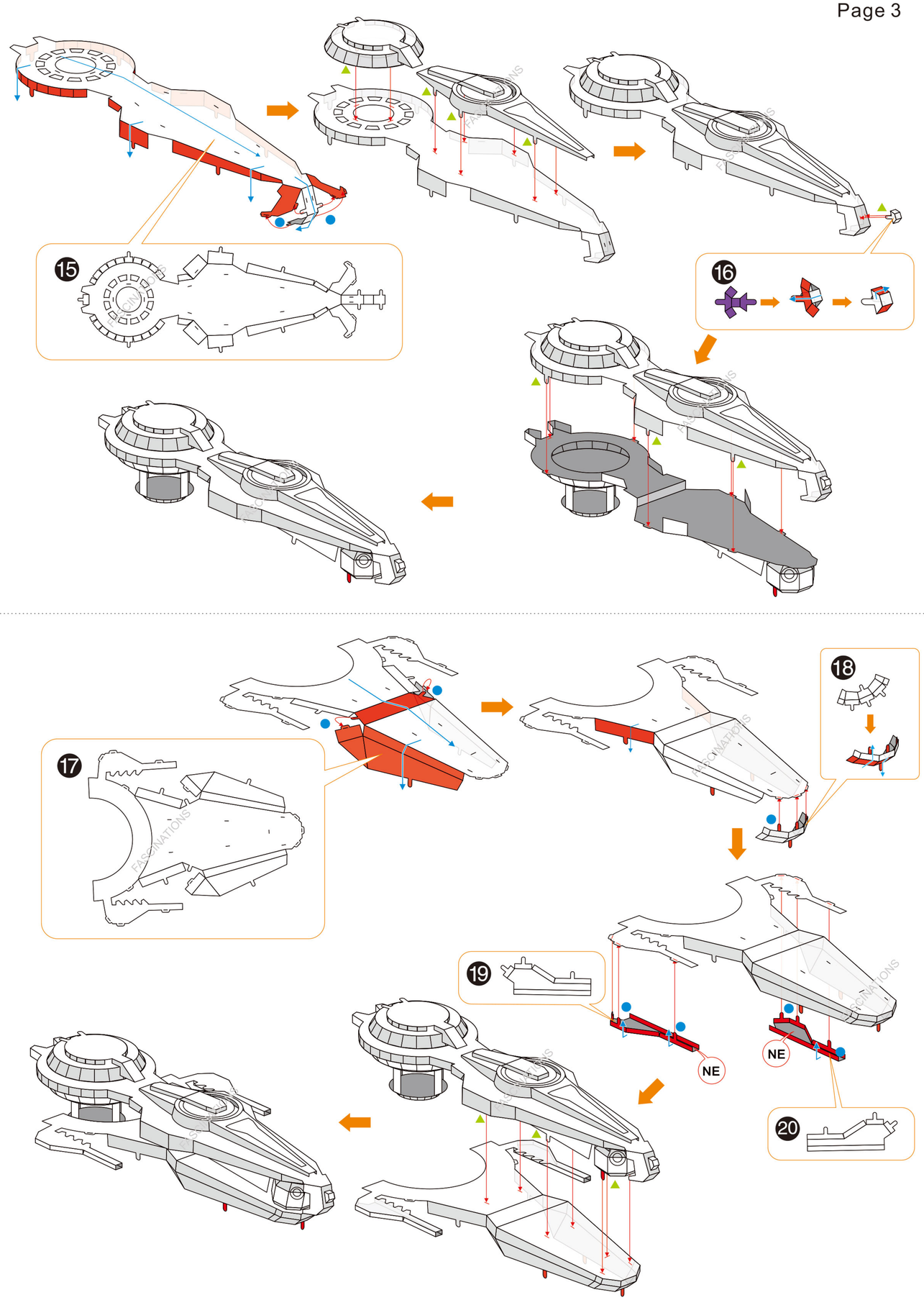
15
16
17
18
19
NE
NE
20

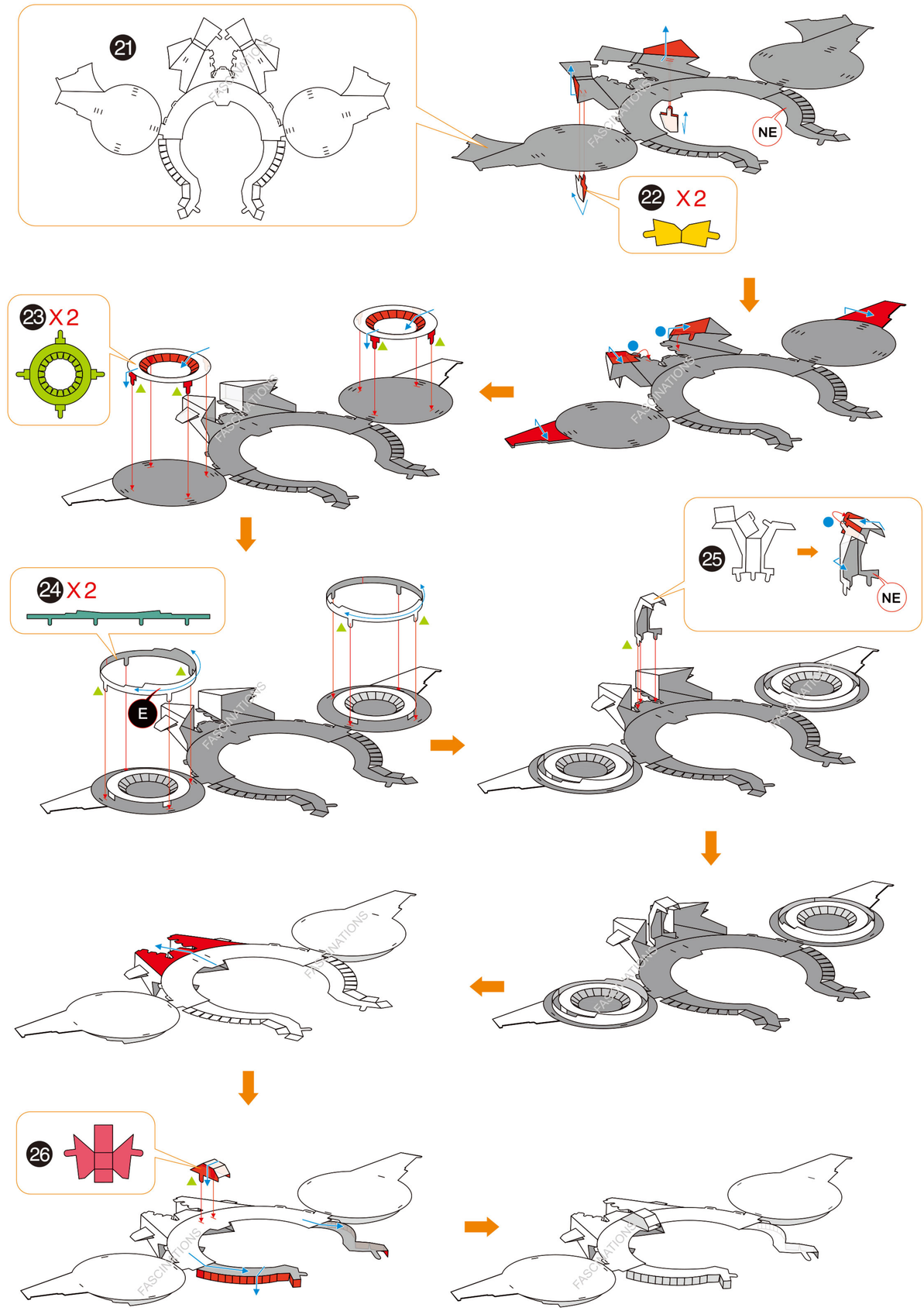
21
NE
22 X2
23 X2
24 X2
E
25
NE
26

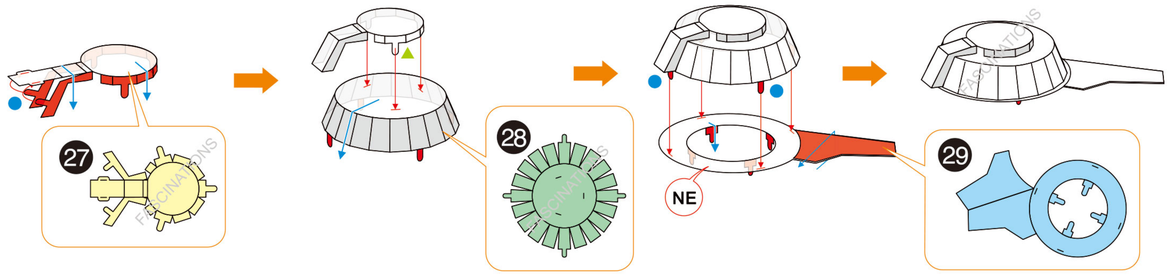
27
28
NE
29

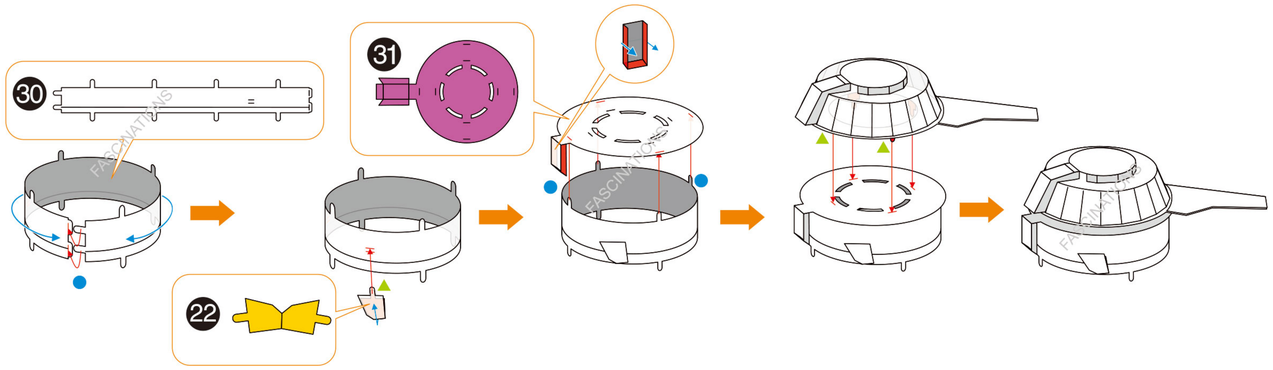
30
31
22

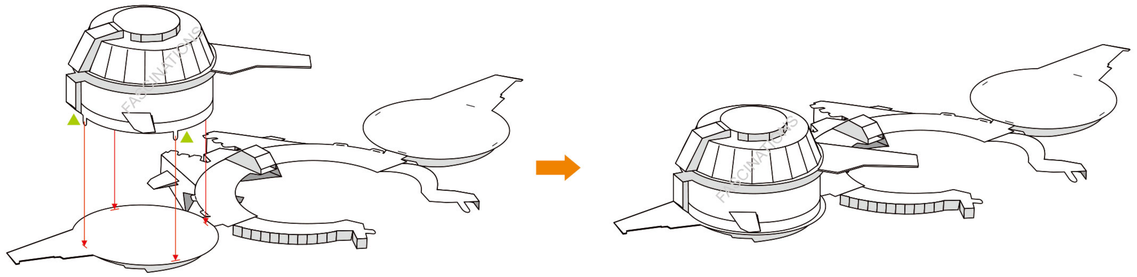

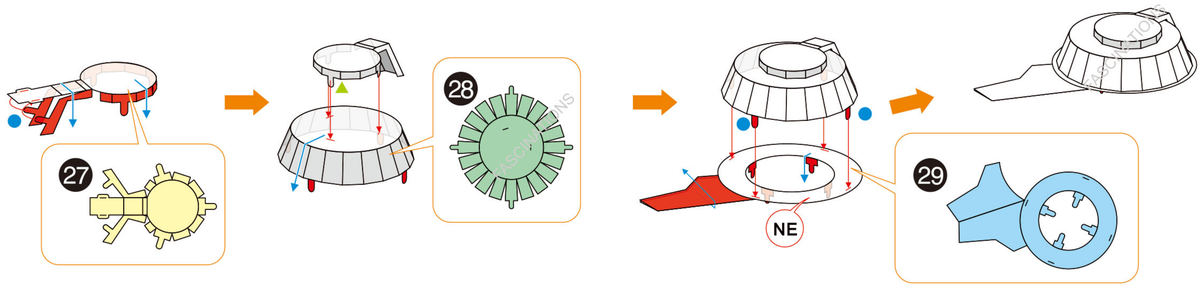
27
28
NE
29

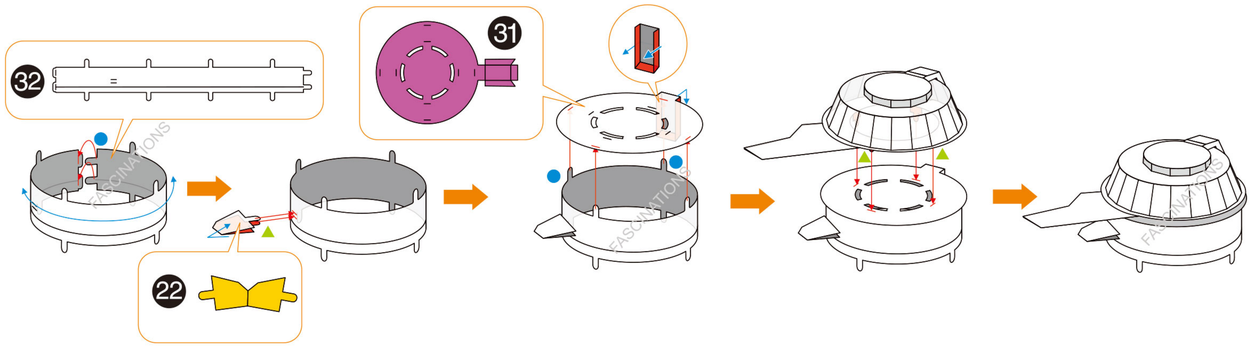
32
31
22

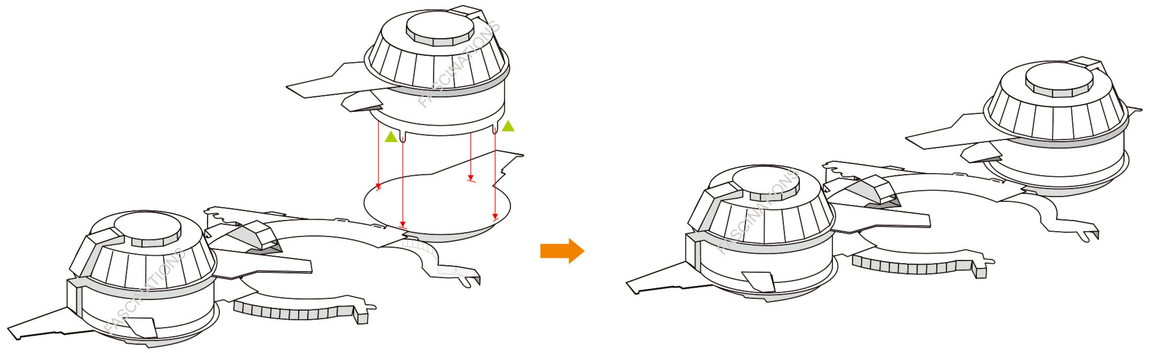

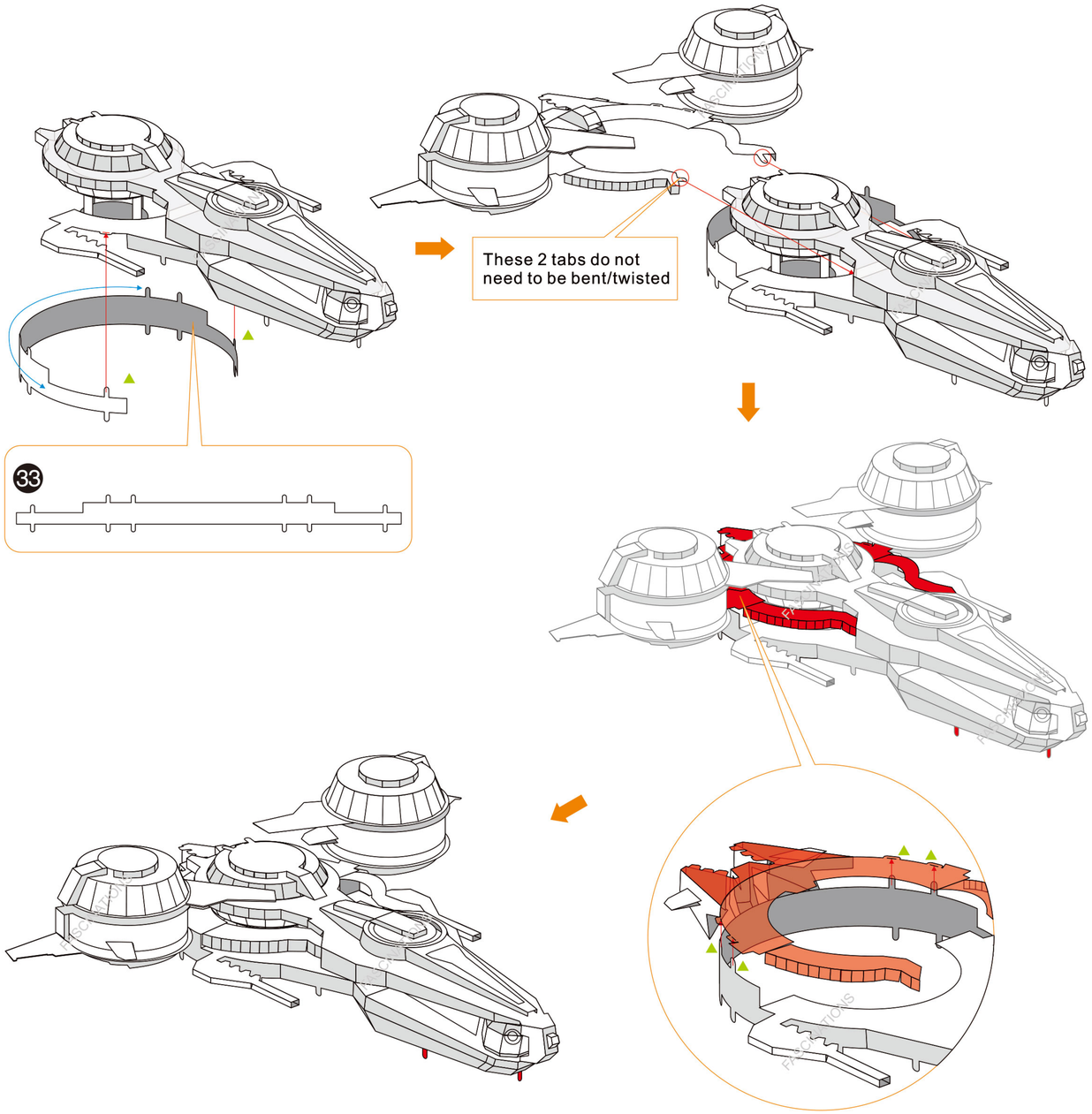
These 2 tabs do not need to be bent/twisted
33

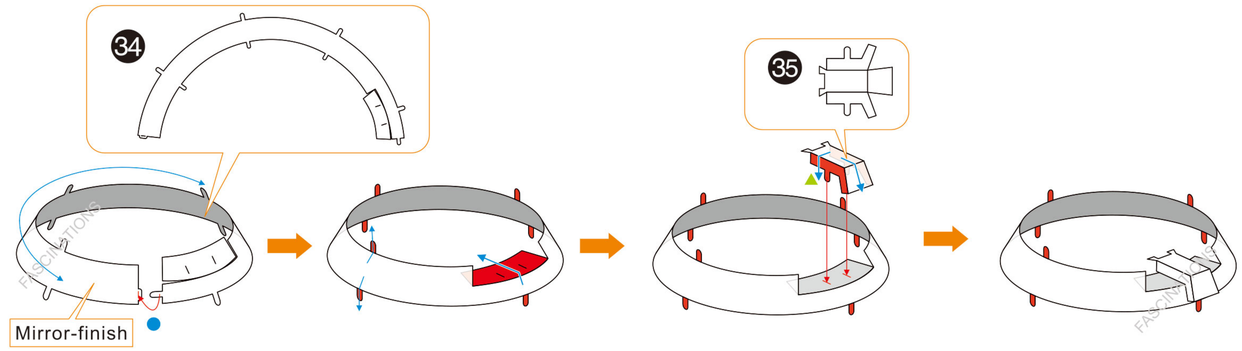

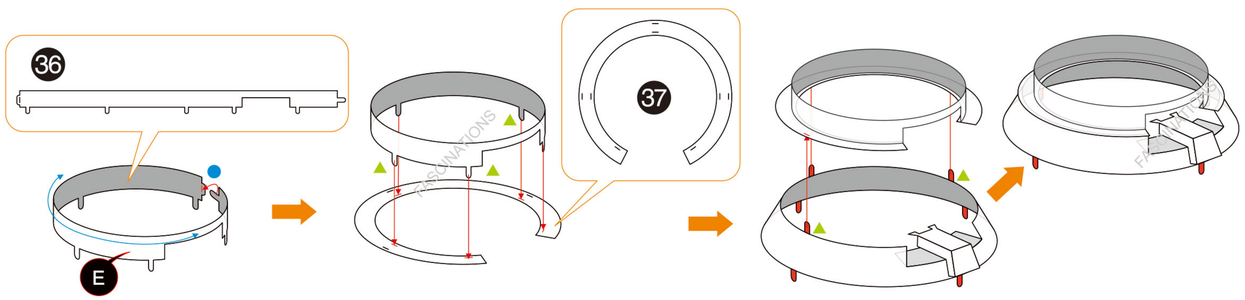

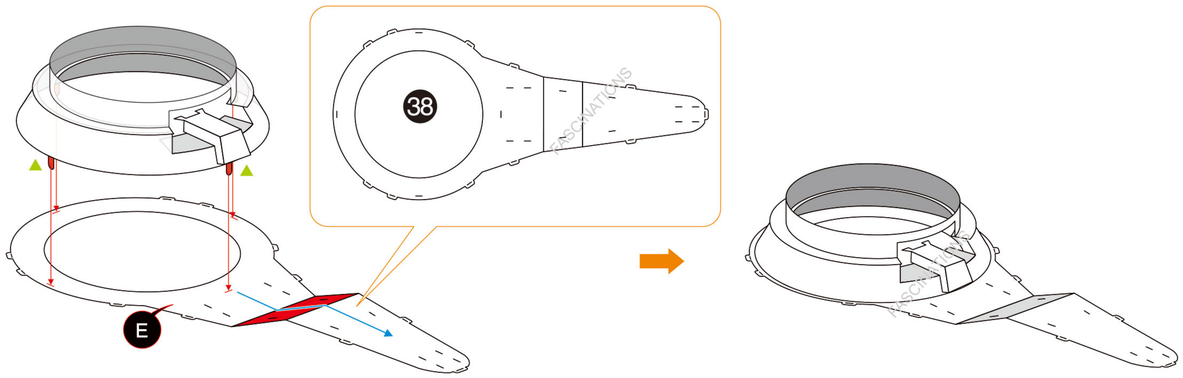

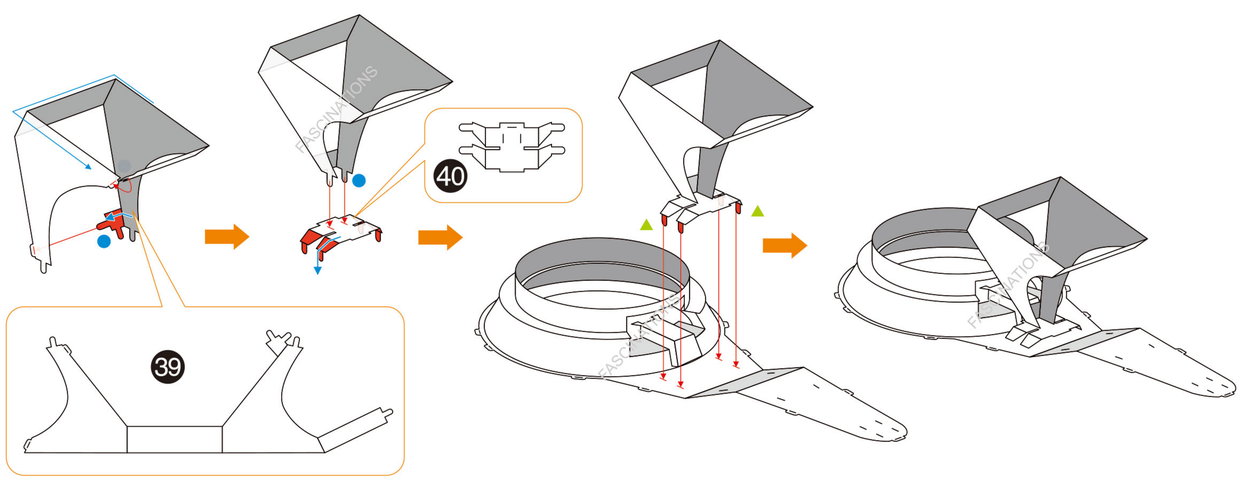

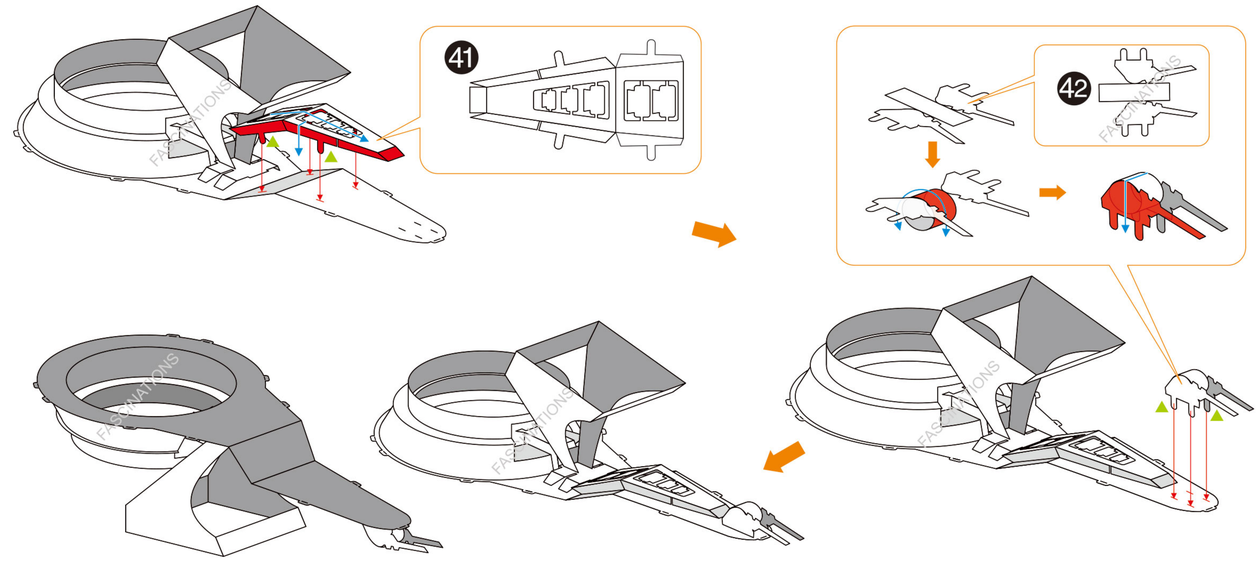

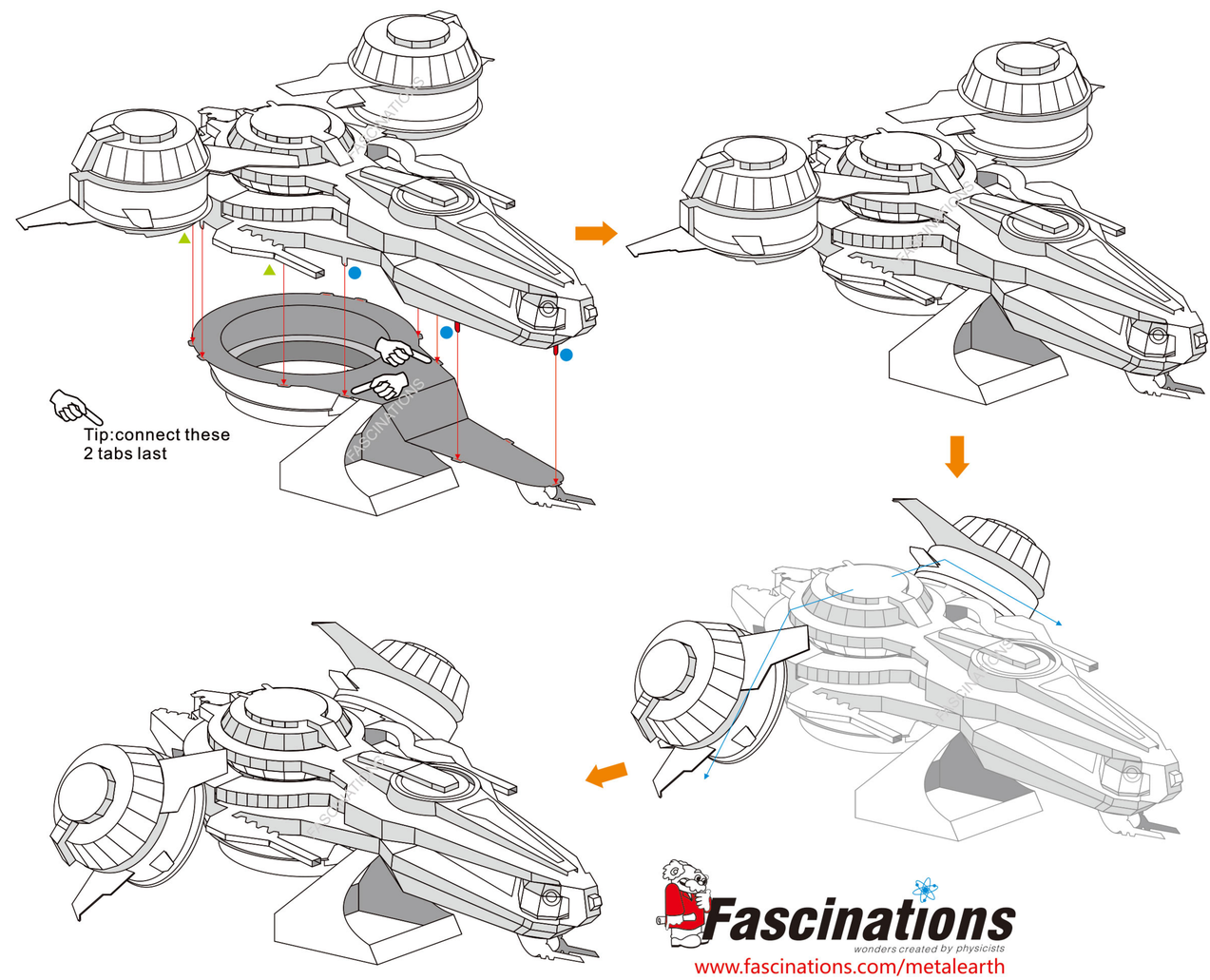

Fascinations
wonders created by physicists
www.fascinations.com/metalearth
© 2016,Fascinations Seattle,WA