METAL EARTH®

3D METAL MODEL KITS

360° view

It is highly recommended that you visit
www.fascinations.com/metalearth360/mms280g
to see the completed model before assembling your own

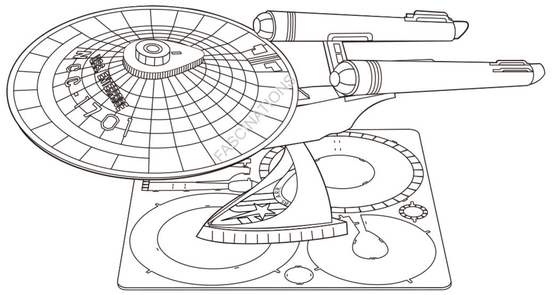

mms280g

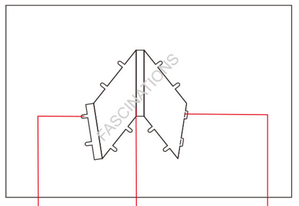

Insertion tabs are inserted and then folded

Fold lines can be seen as shown here

Insertion holes

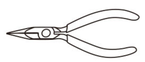

Needle nose pliers are helpful for assembly

Legends:

- E — Engraved side
- NE — Non-engraved side
- Attention point

To create the best connections

- Insert tab and bend 90 degrees for most visible areas
- Insert tab and twist 90 degrees is best in some areas to ensure a tight connection

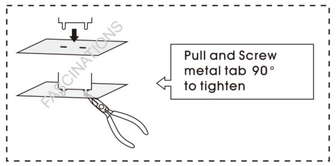

Metal sheets

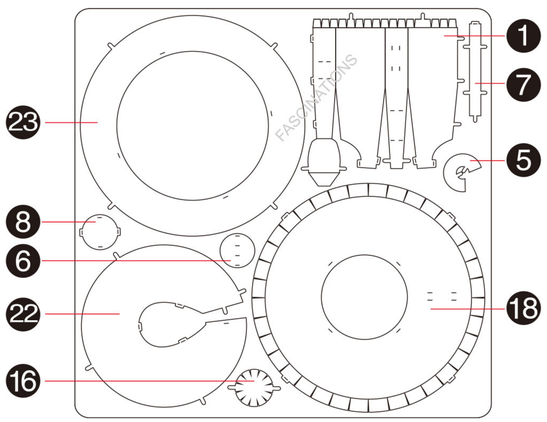

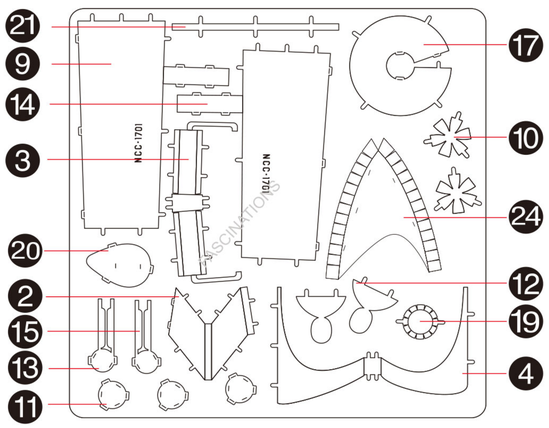

In order to avoid possible injury from sharp edges, please carefully discard the metal sheet after parts have been removed

Assembly Flow Chart

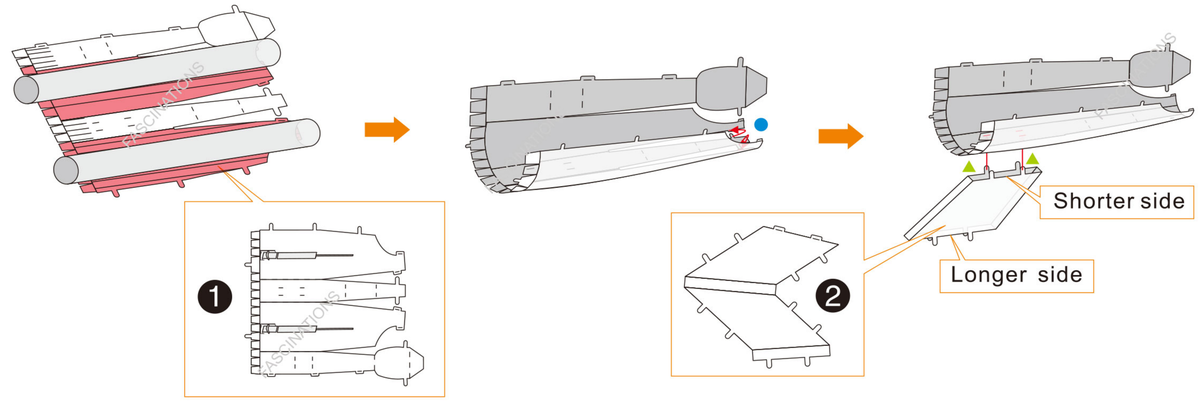

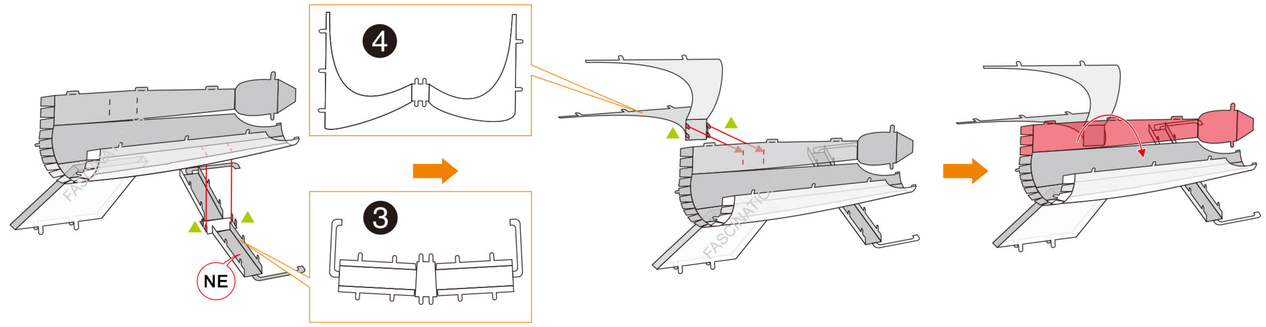

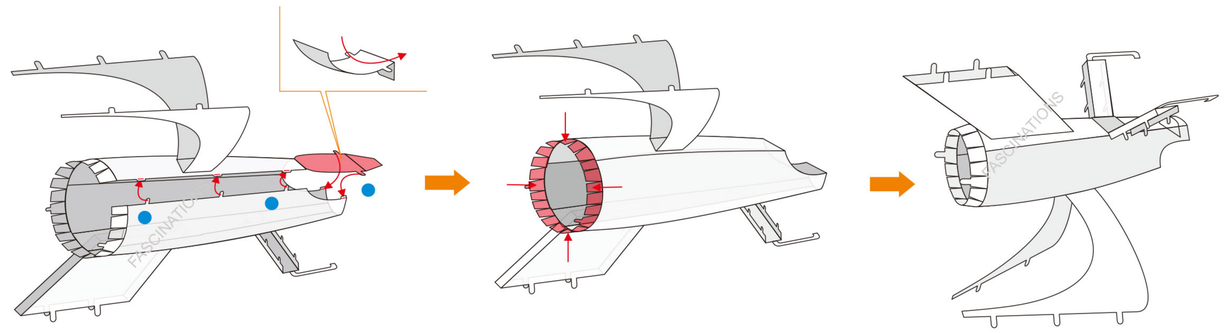

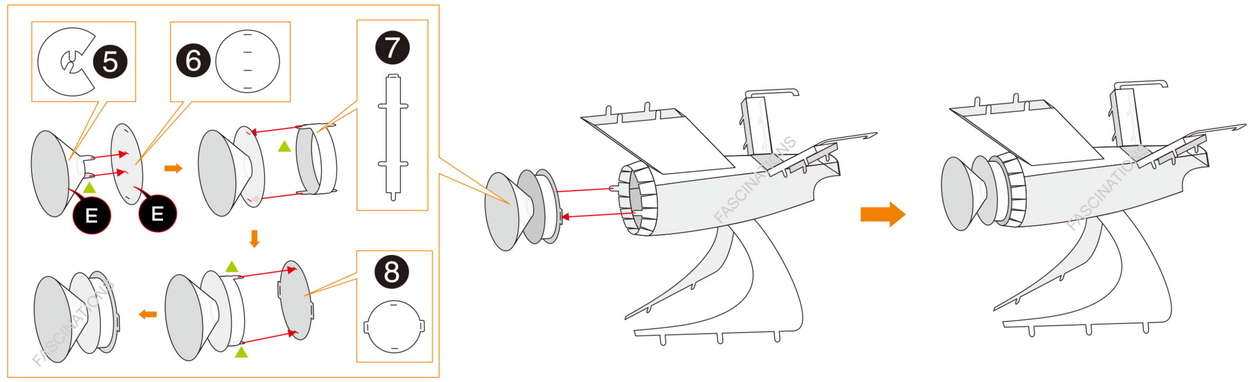

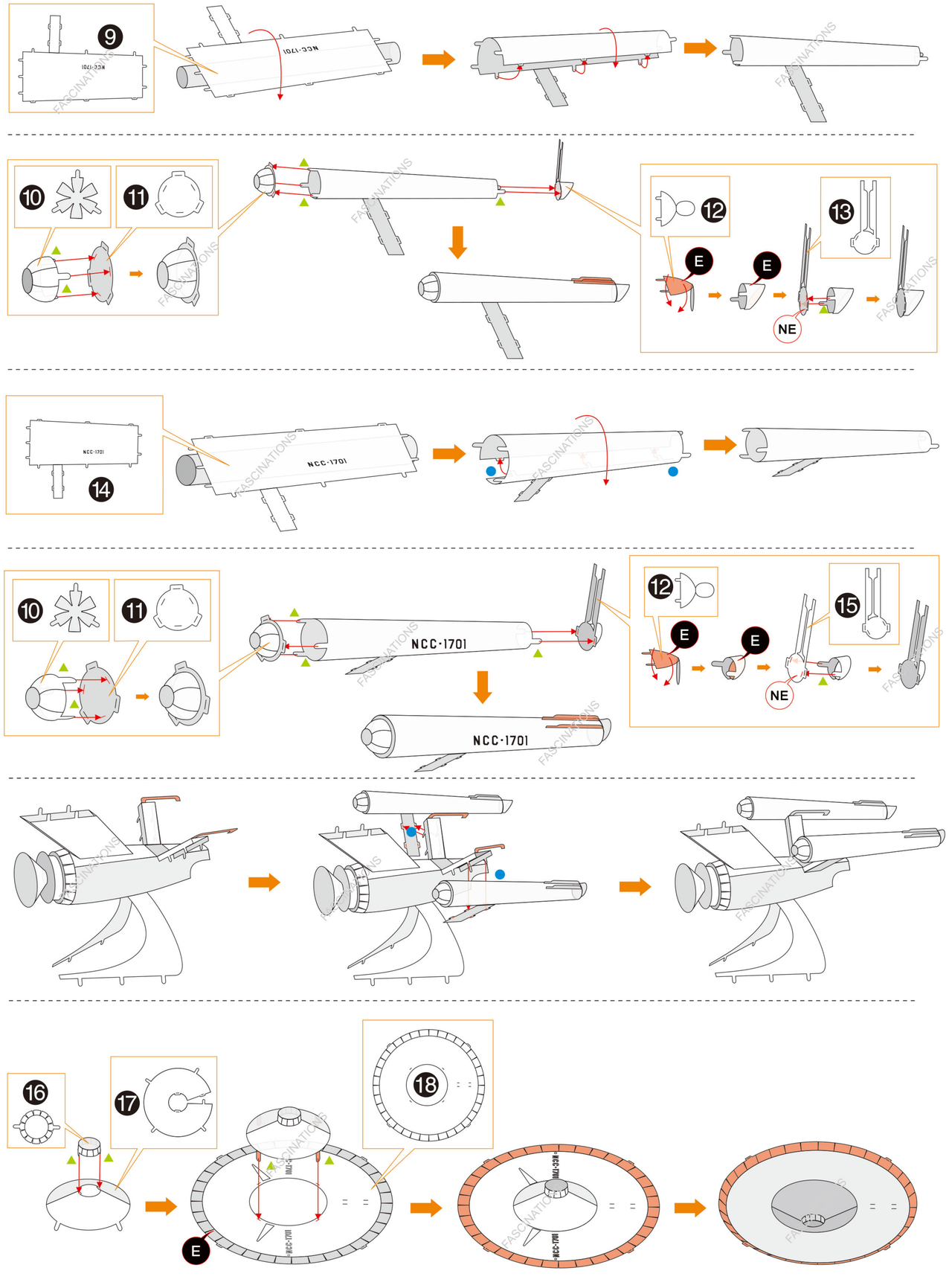

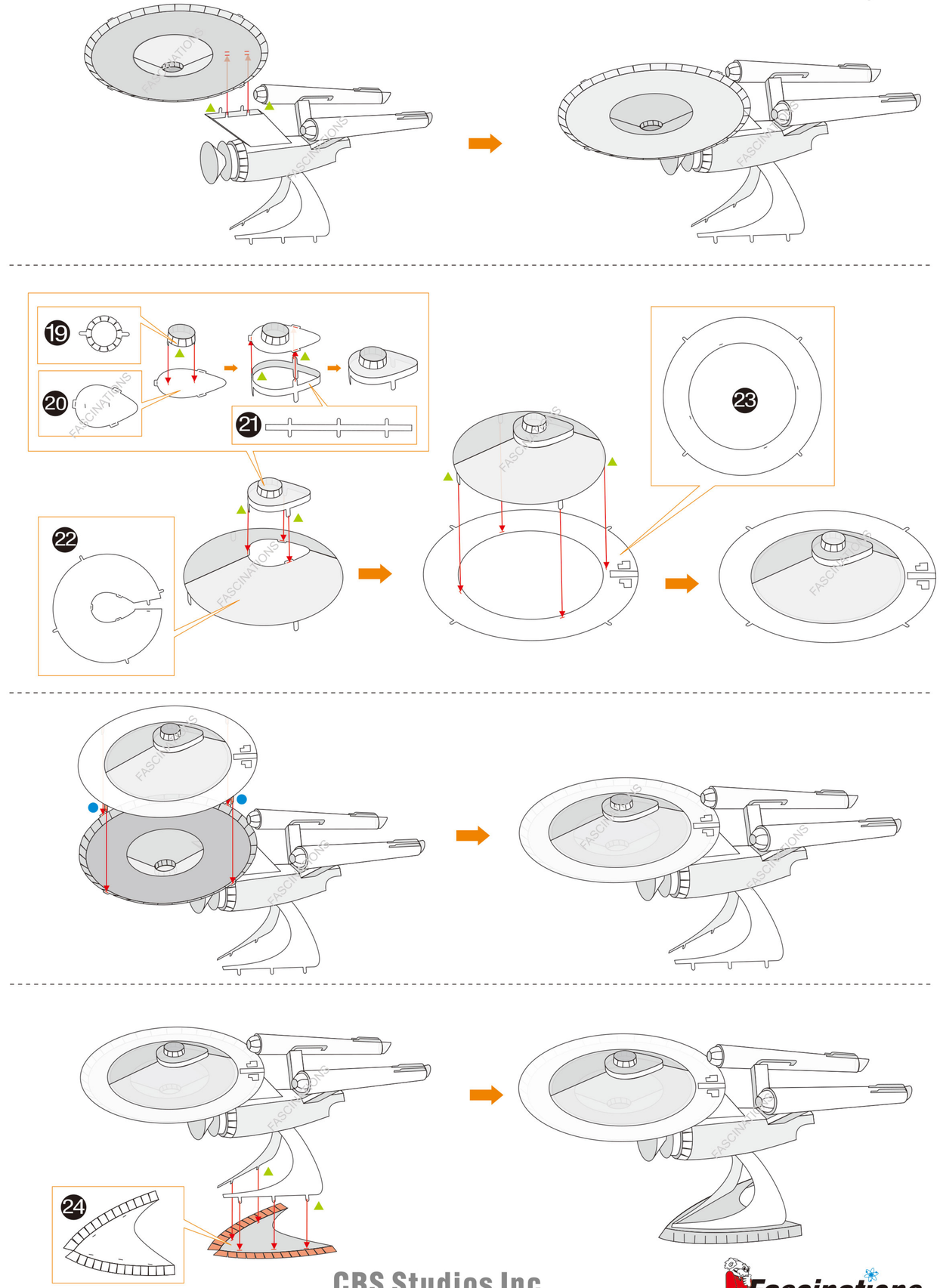

CBS Studios Inc
TM & © 2014 CBS Studios Inc
All Rights Reserved

Fascinations
wonders created by physicists
www.fascinations.com/metalearth