CAT®

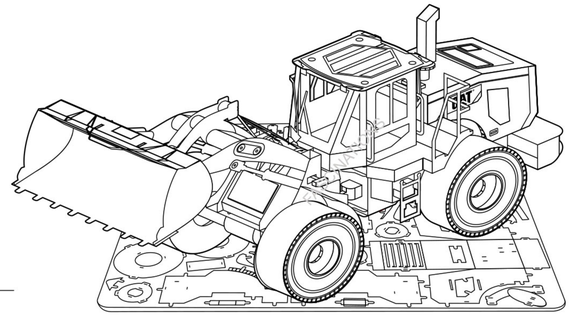

METAL EARTH®
3D METAL MODEL KITS

WHEEL LOADER

Item number: MMS423

360° view

It is highly recommended that you visit
www.fascinations.com/metalearth360/mms423
to see the completed model before assembling your own

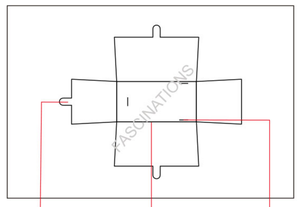

Insertion tabs are inserted and then folded

Fold lines can be seen as shown here

Insertion holes

Needle nose pliers are helpful for assembly

Legends:

- E — Engraved side
- NE — Non-engraved side
- Attention point

To create the best connections

- Insert tab and bend 90 degrees for most visible areas
- Insert tab and twist 90 degrees is best in some areas to ensure a tight connection

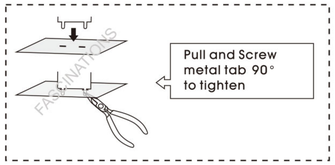

Metal sheets

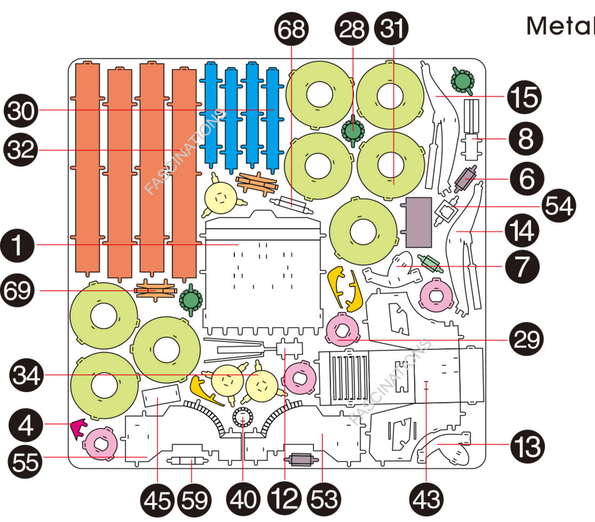

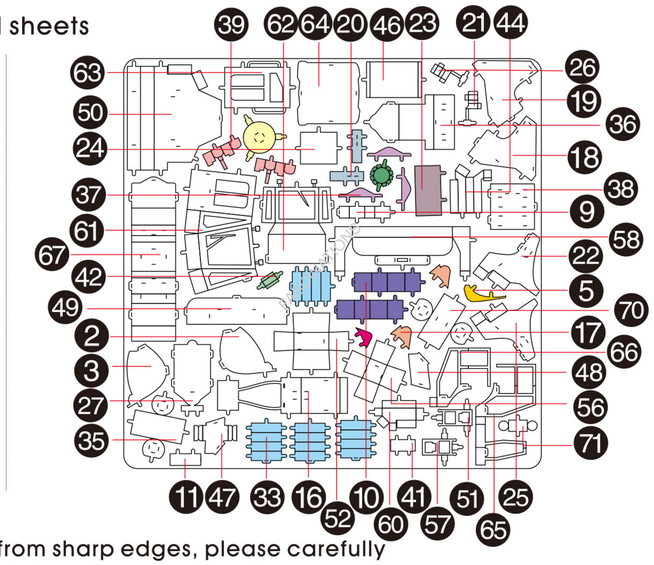

⚠ In order to avoid possible injury from sharp edges, please carefully discard the metal sheet after parts have been removed

Assembly Flow Chart

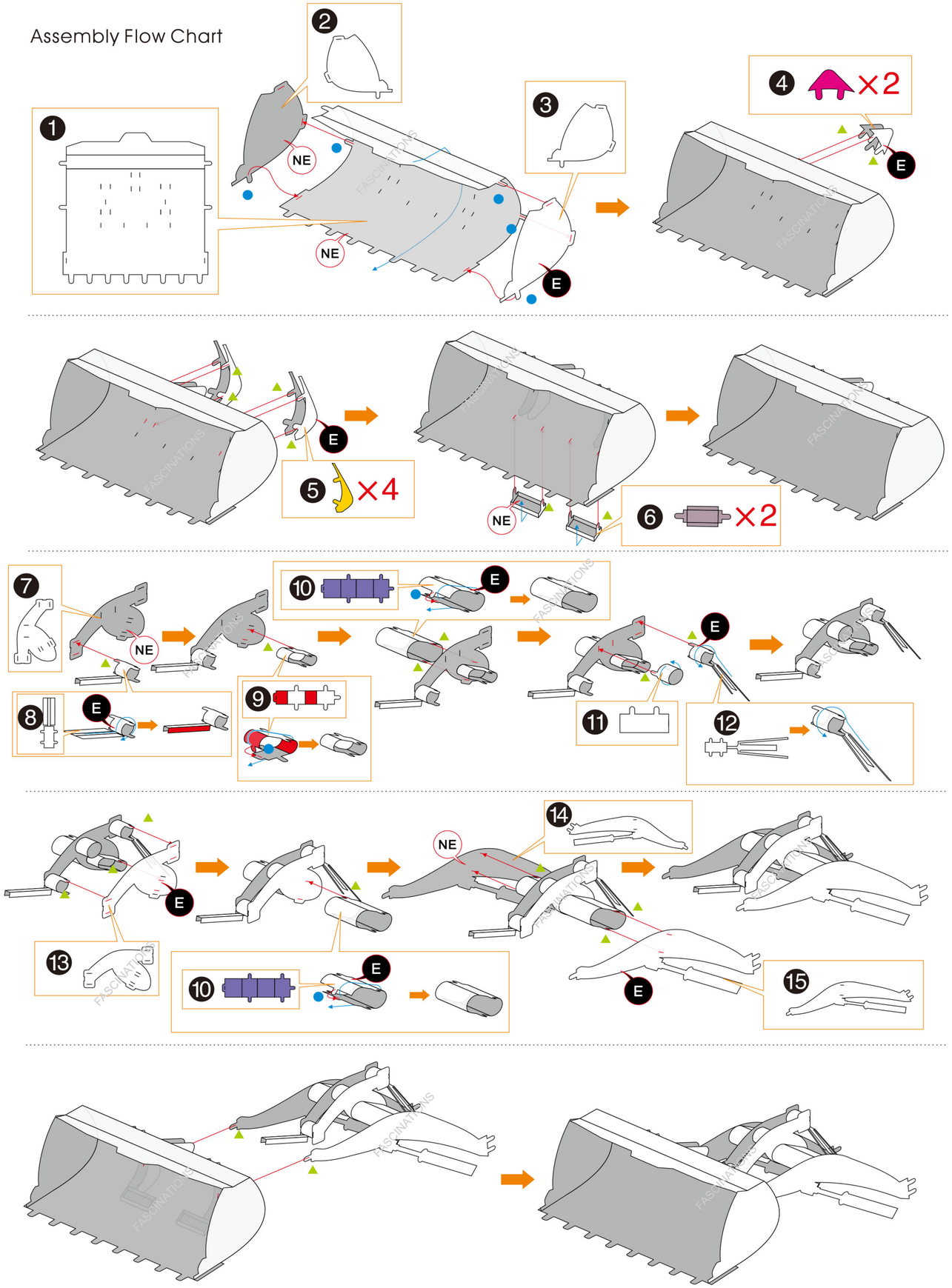

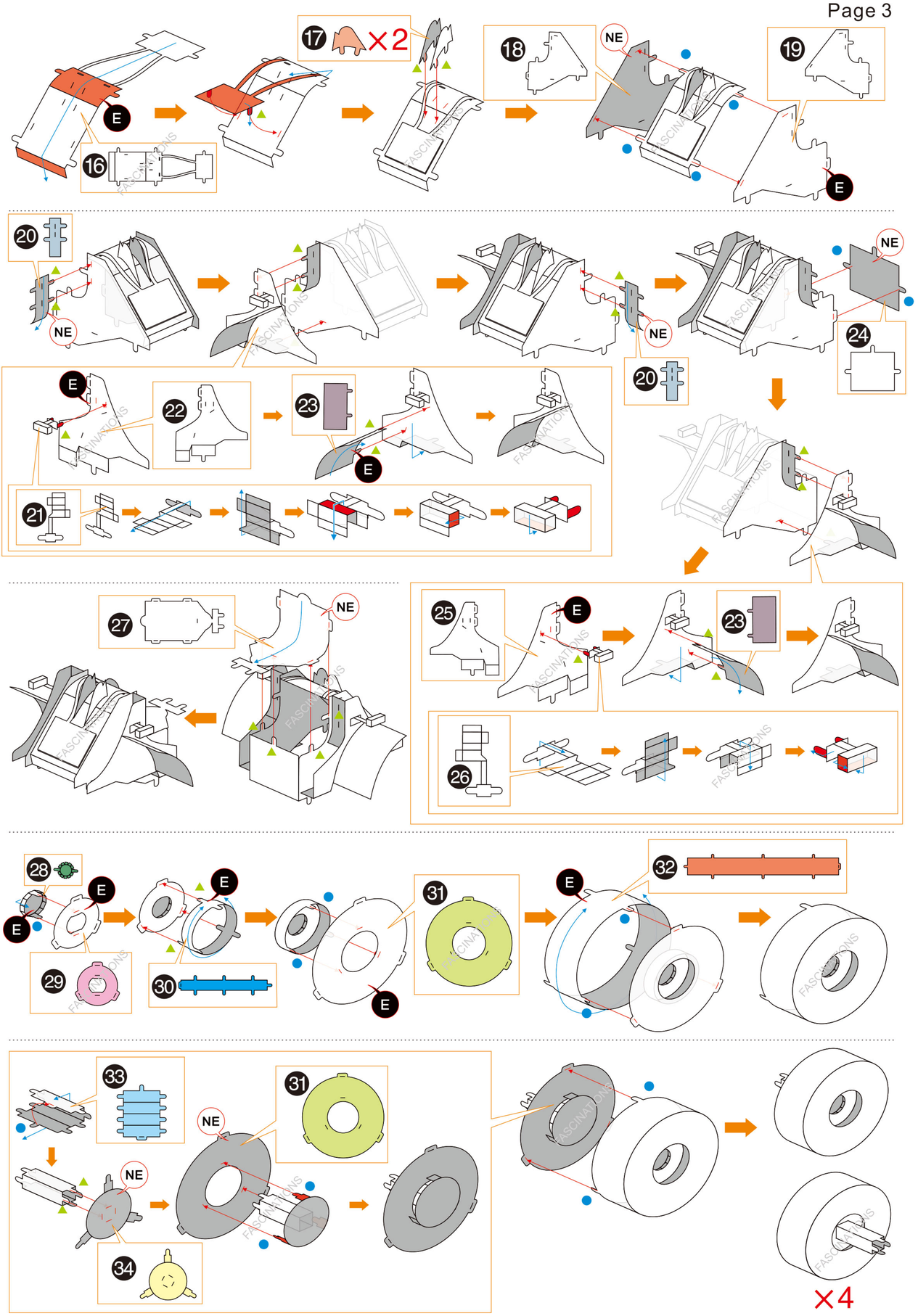
E
16
17
×2
18
NE
19
E
20
NE
NE
NE
24
20
E
22
23
E
21
27
NE
25
E
23
26
28
E
E
E
29
30
E
31
E
32
33
31
NE
NE
34
×4

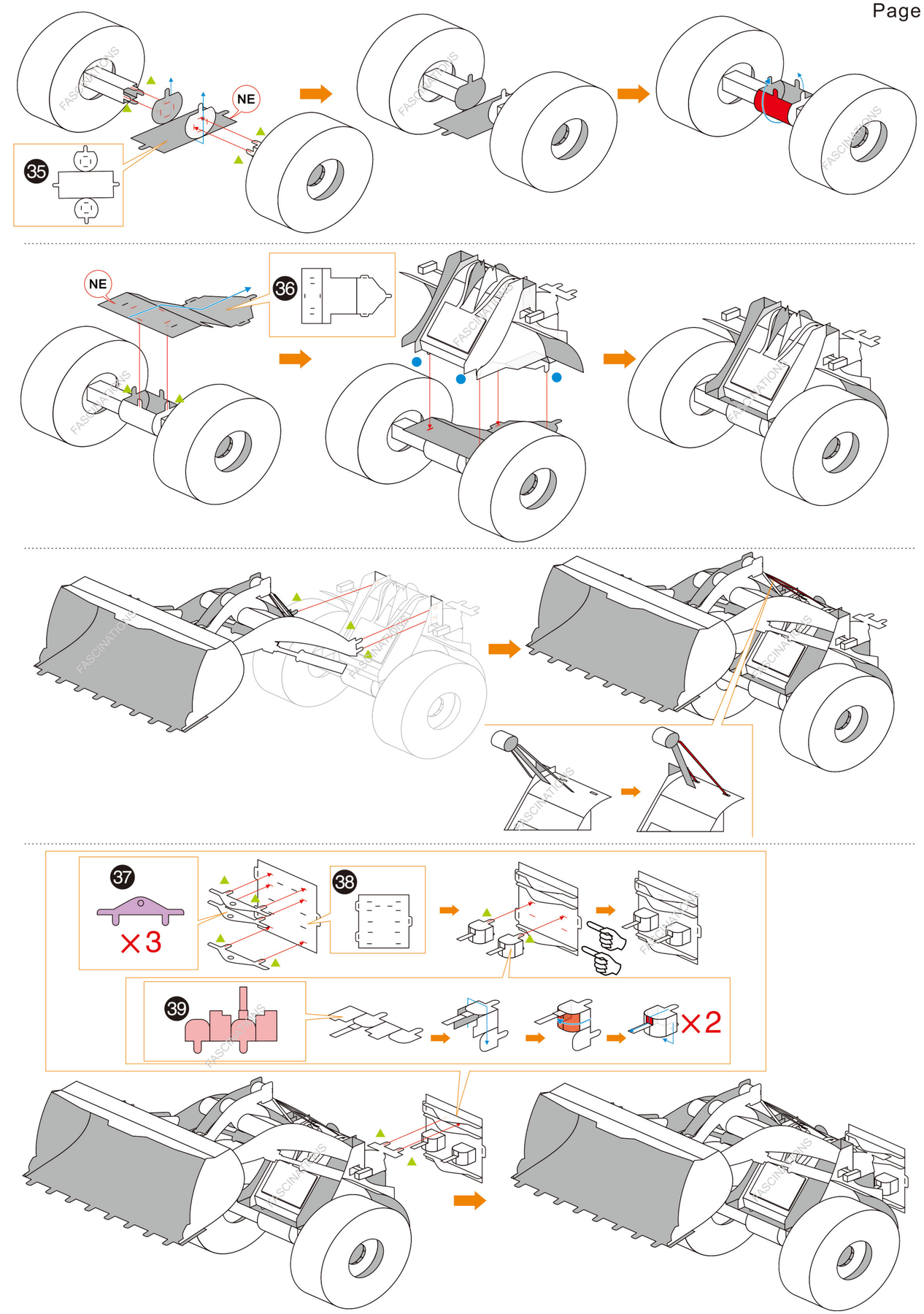
NE
35
NE
36
37
×3
38
39
×2

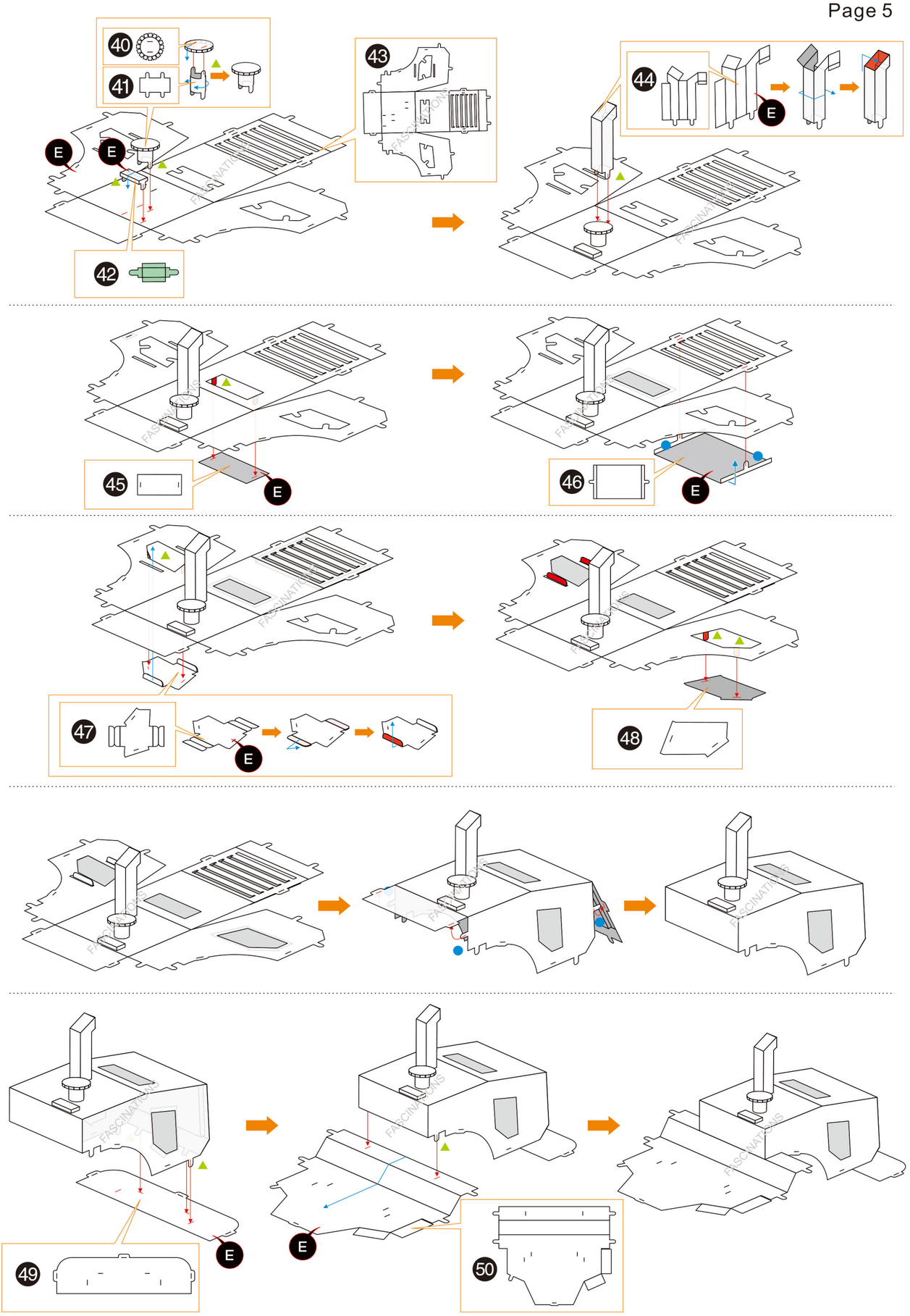
40
41
42
43
44
E
45
46
47
48
49
50

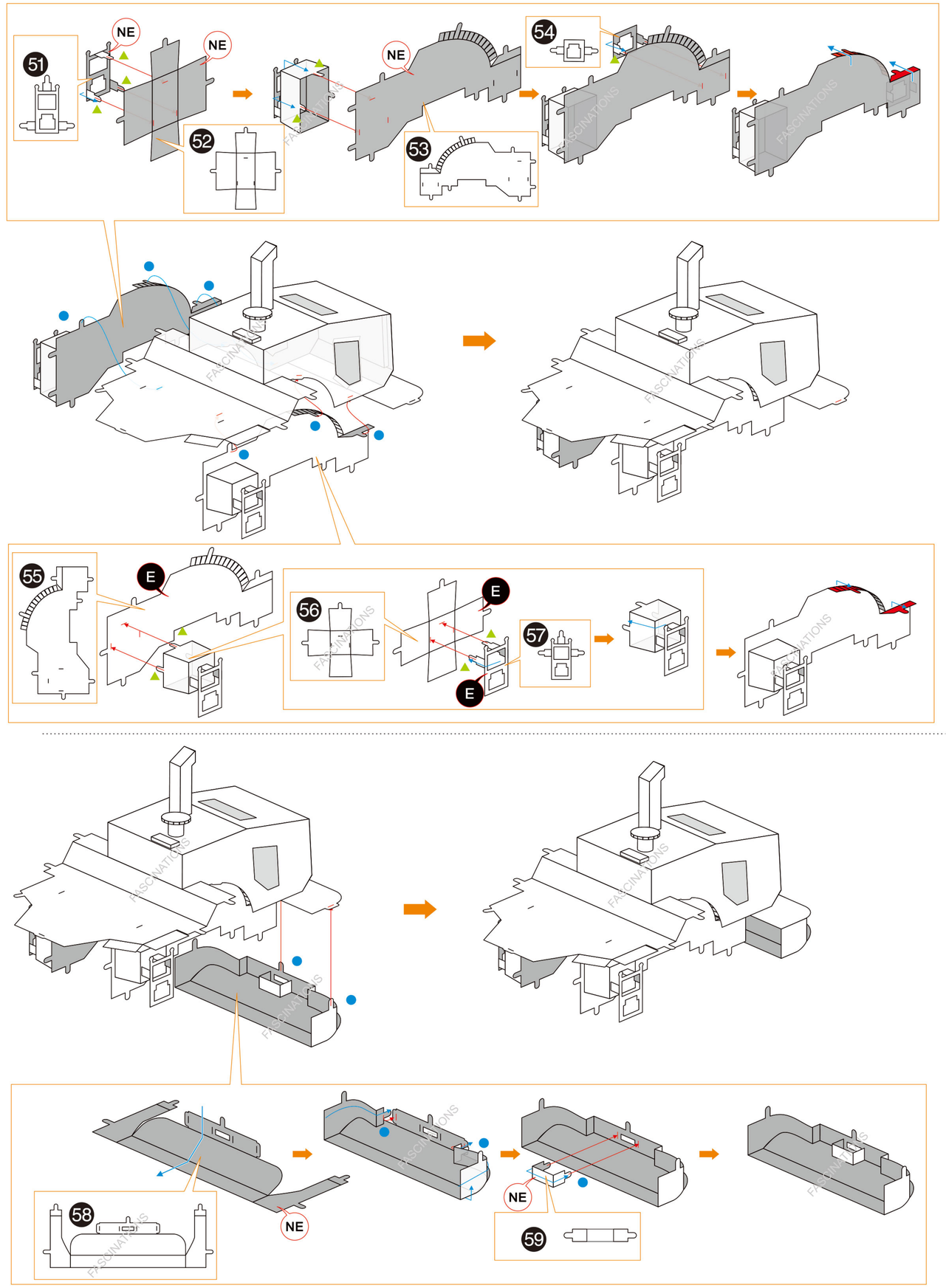
51
52
53
54
55
56
57
58
59
NE
E

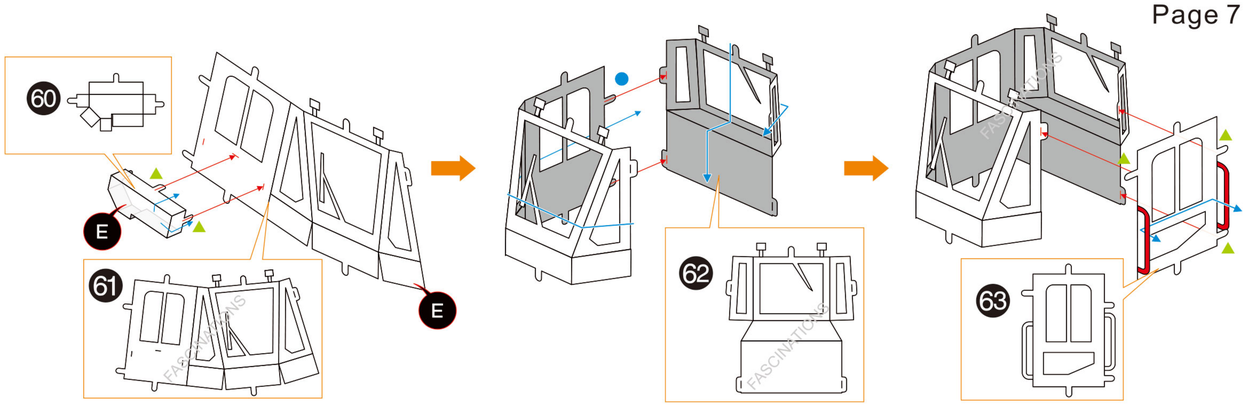

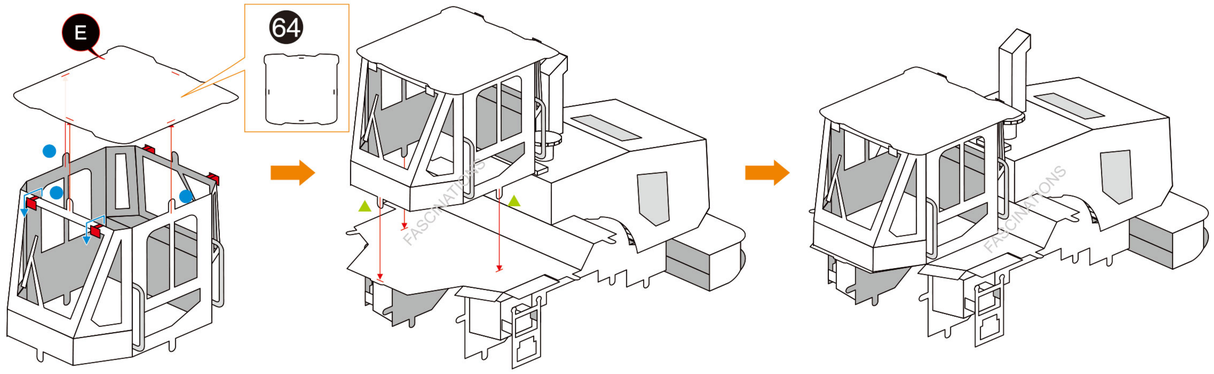

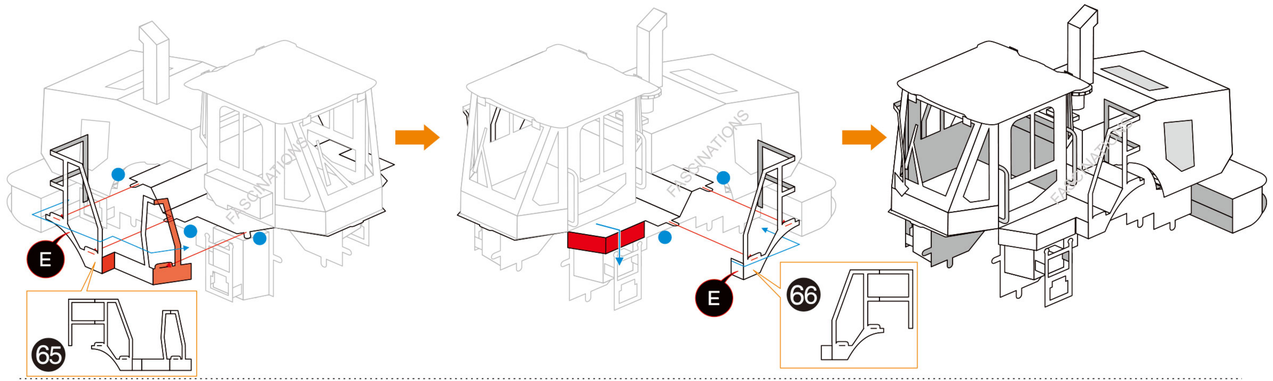

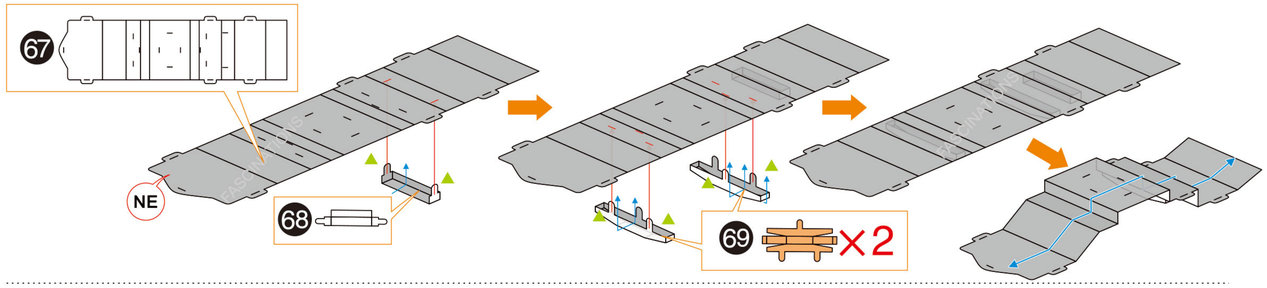

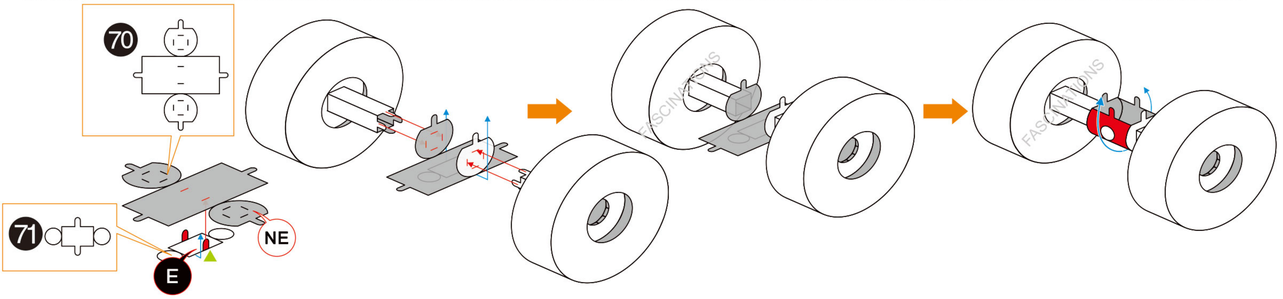

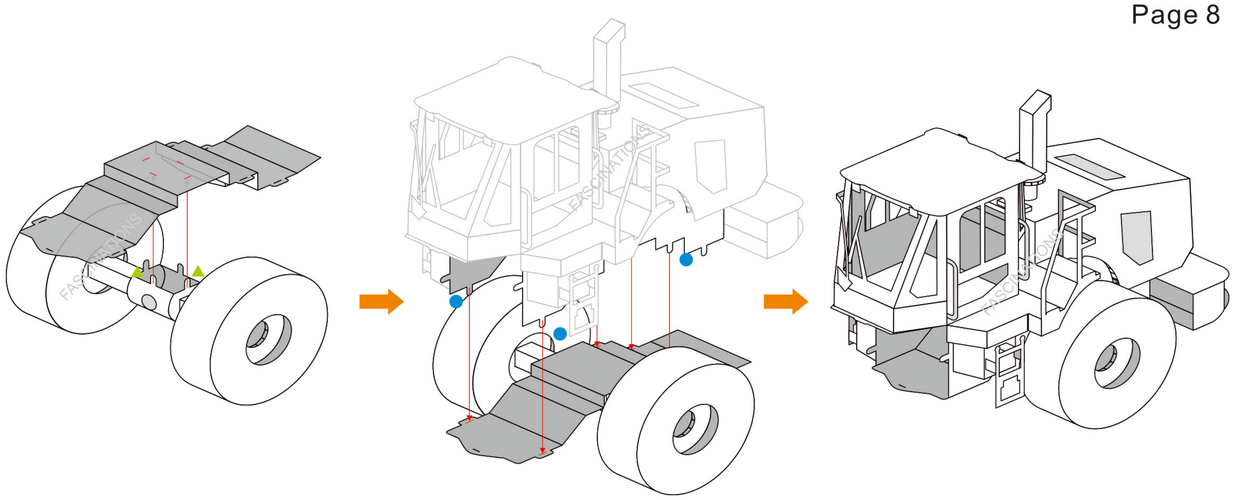

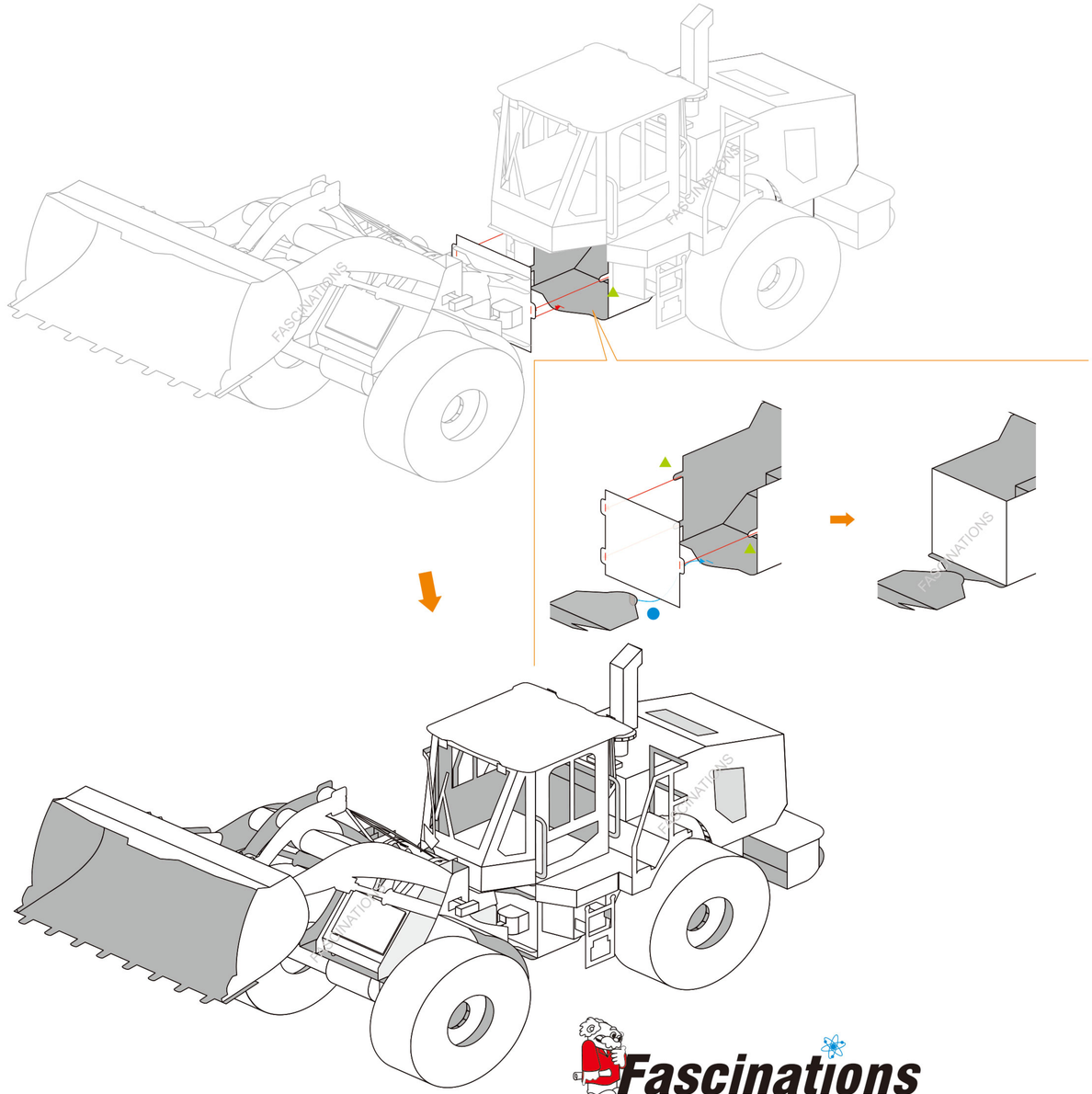

Fascinations
wonders created by physicists
www.fascinations.com/metalearth
© 2016,Fascinations Seattle,WA