METAL EARTH®
3D METAL MODEL KITS

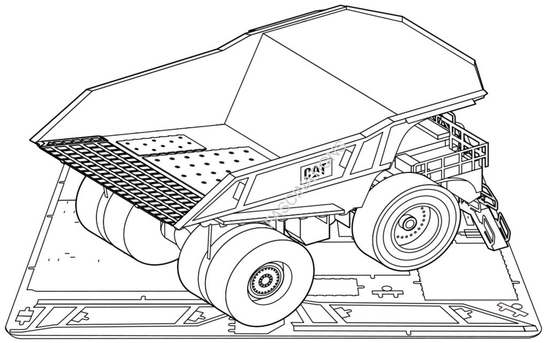

MINING TRUCK
Item number: MMS424

360° view

It is highly recommended that you visit
www.fascinations.com/metalearth360/mms424
to see the completed model before assembling your own

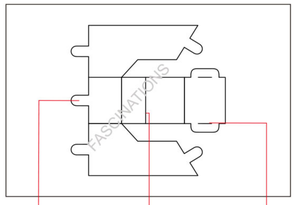

Insertion tabs are inserted and then folded

Fold lines can be seen as shown here

Insertion holes

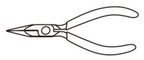

Needle nose pliers are helpful for assembly

To create the best connections

- Insert tab and bend 90 degrees for most visible areas
- Insert tab and twist 90 degrees is best in some areas to ensure a tight connection

Legends:

- E — Engraved side
- NE — Non-engraved side
- Attention point

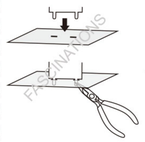

Pull and Screw metal tab 90° to tighten

Metal sheets

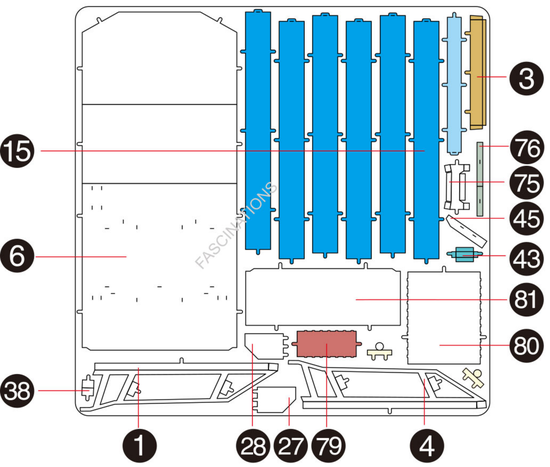

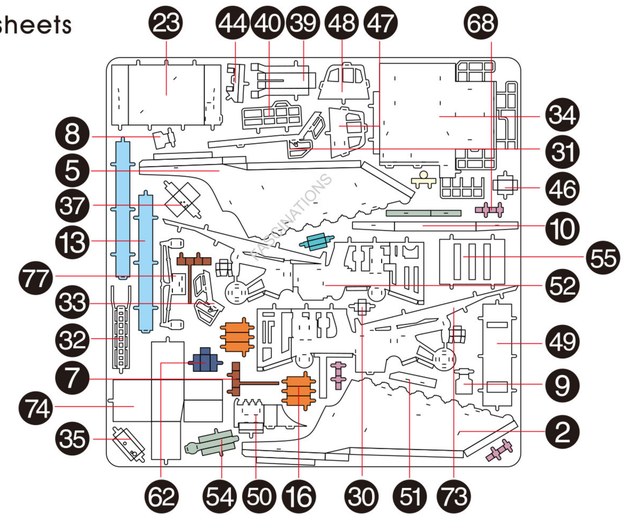

In order to avoid possible injury from sharp edges, please carefully discard the metal sheet after parts have been removed

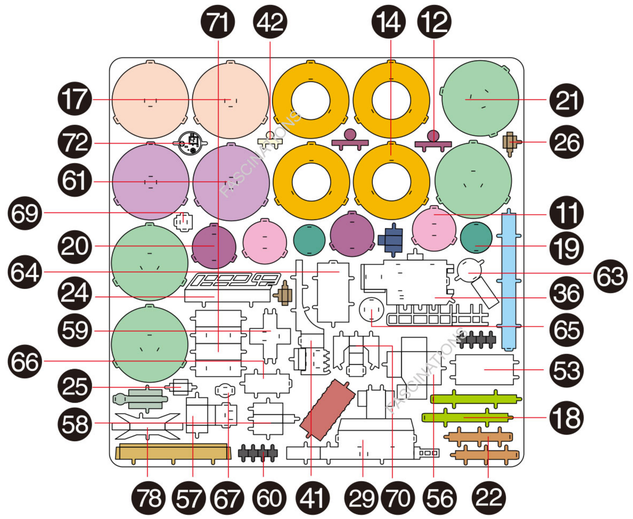

Assembly Flow Chart

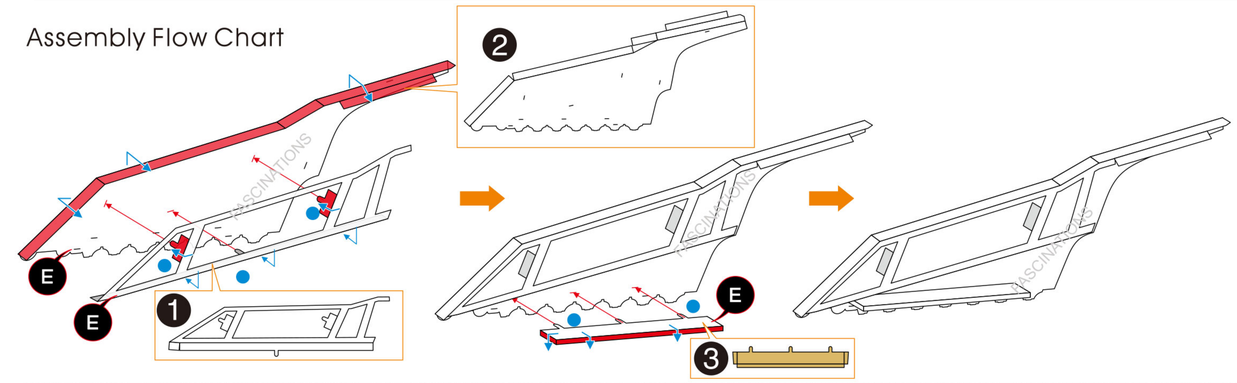

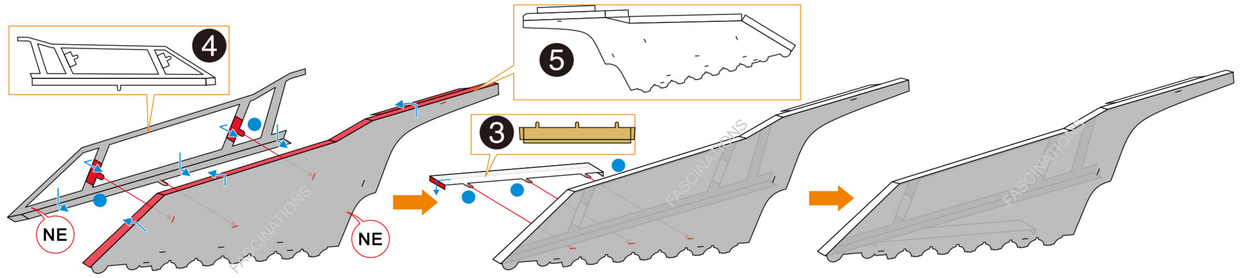

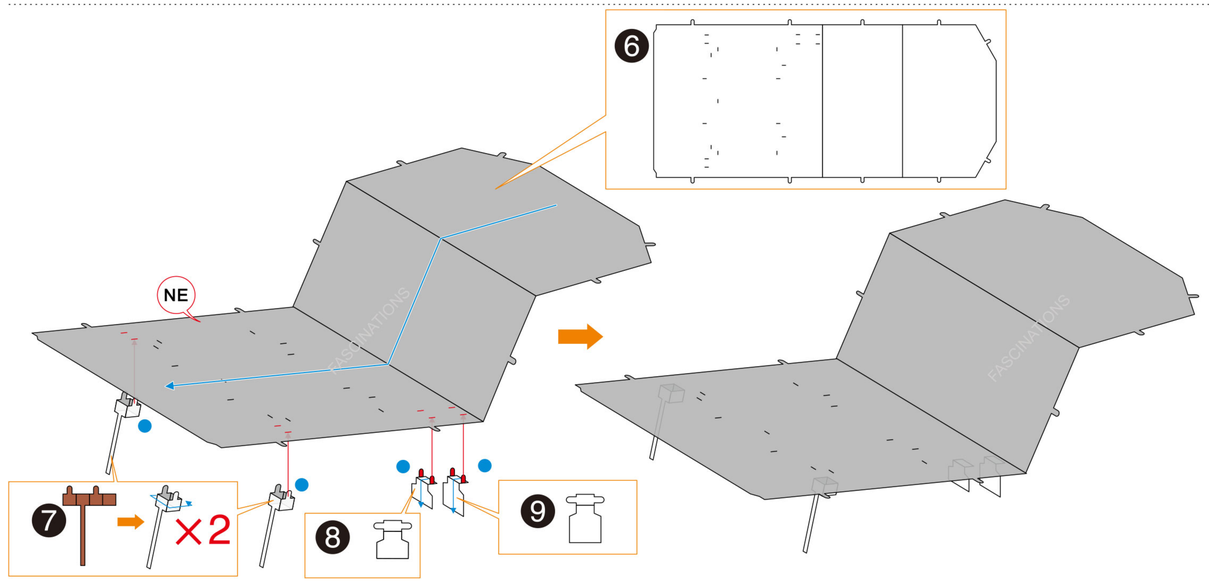

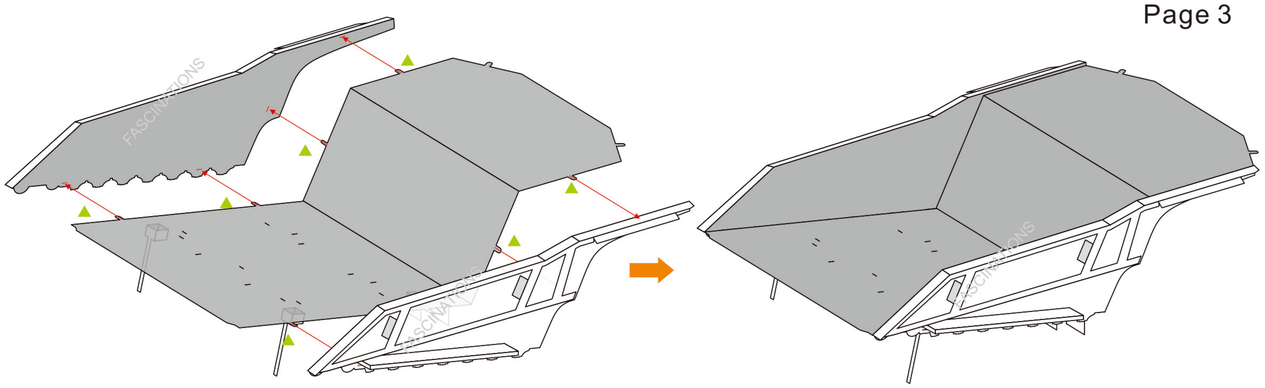

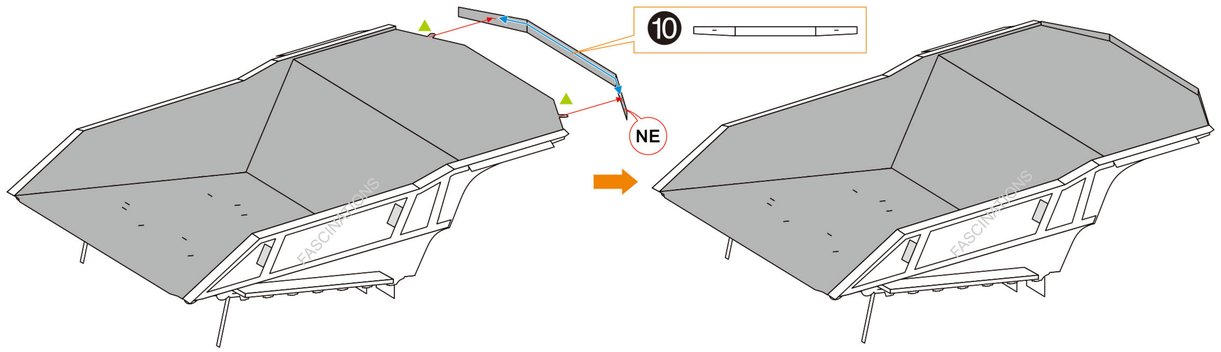
10
NE

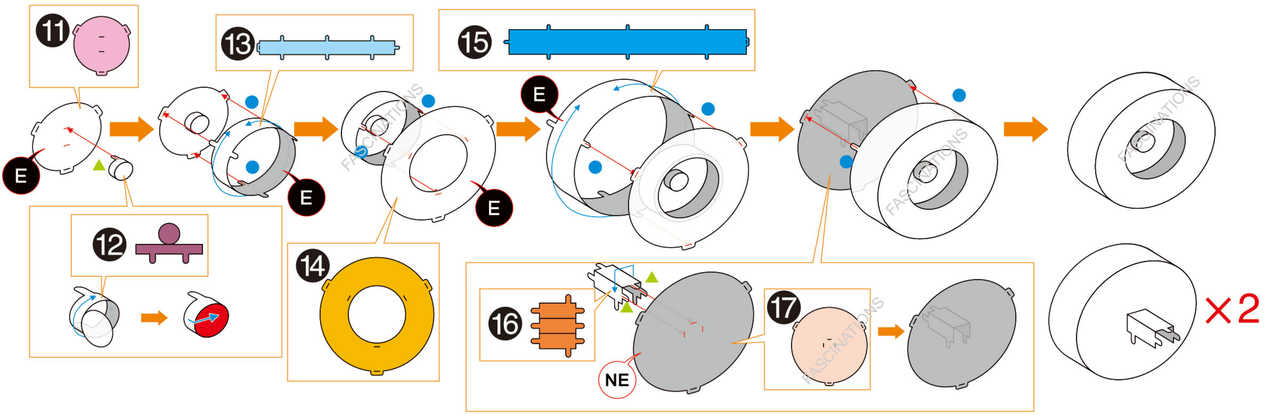
11
13
15
E
E
E
E
12
14
16
17
NE
×2

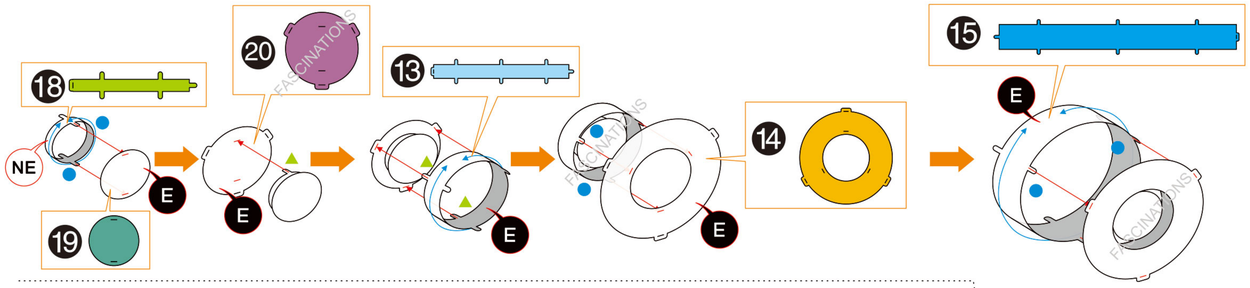
18
20
13
15
NE
E
E
E
E
E
14
19

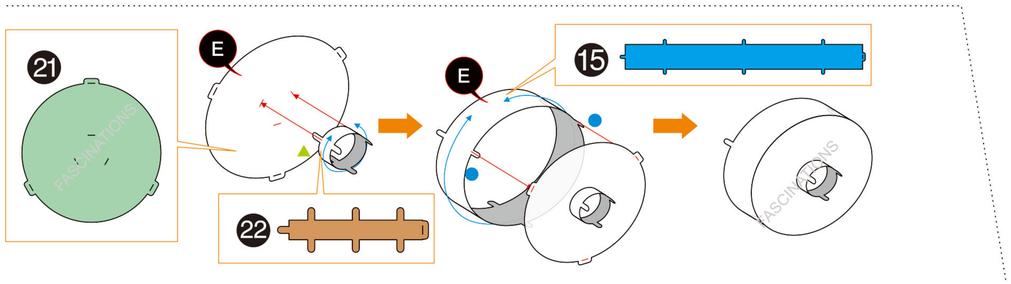
21
E
E
15
22

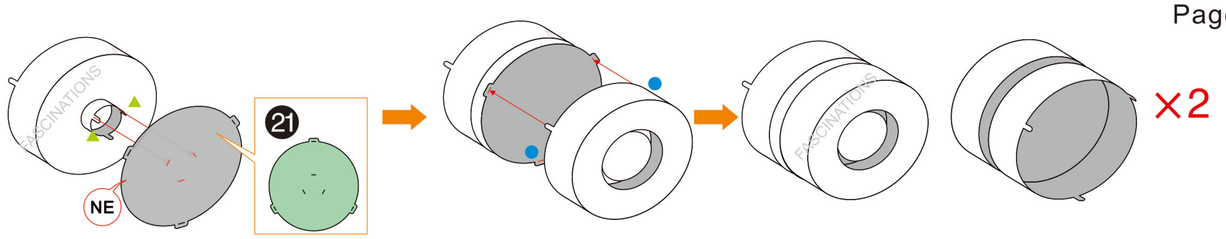
21
NE
×2

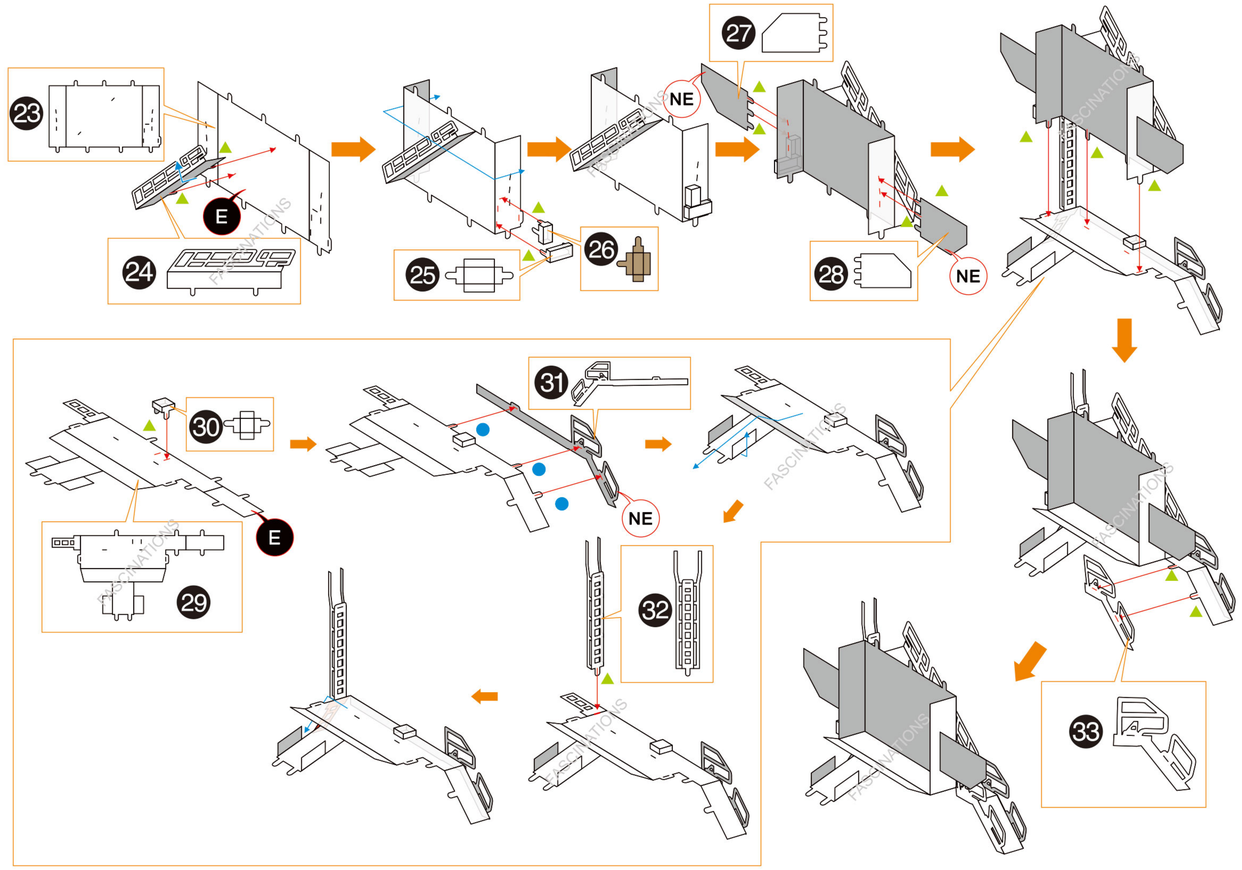
23
E
24
25
26
27
NE
28
NE
30
E
29
31
NE
32
33

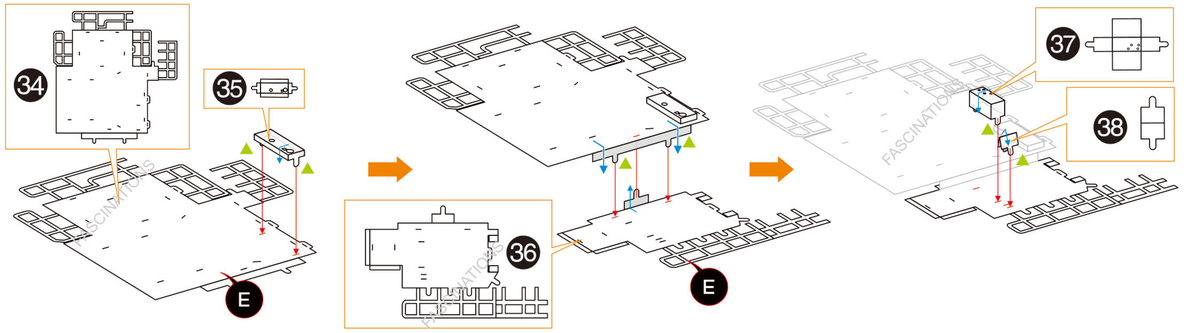
34
35
E
36
E
37
38

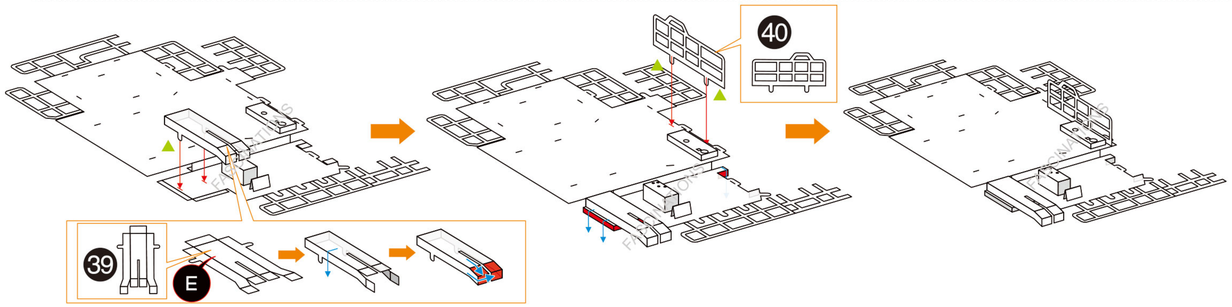
40
39
E

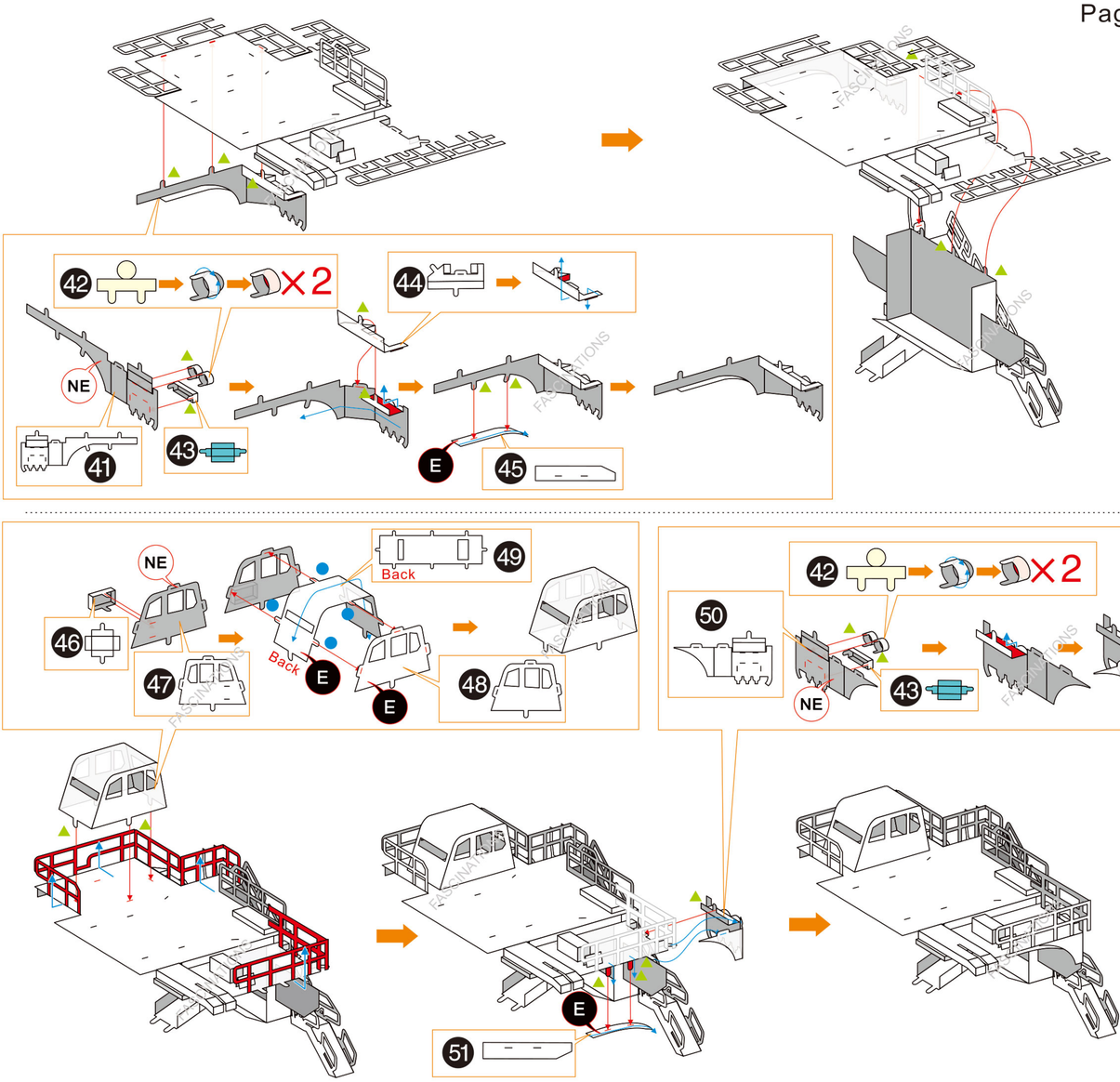
42
×2
44
NE
41
43
E
45

NE
46
47
Back
49
Back
E
E
48

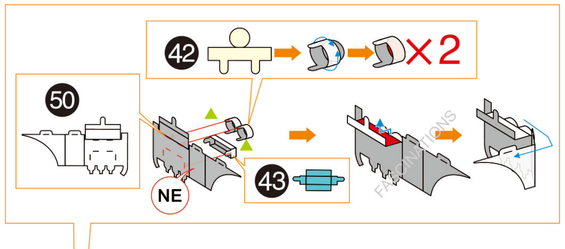
42
×2
50
NE
43

E
51

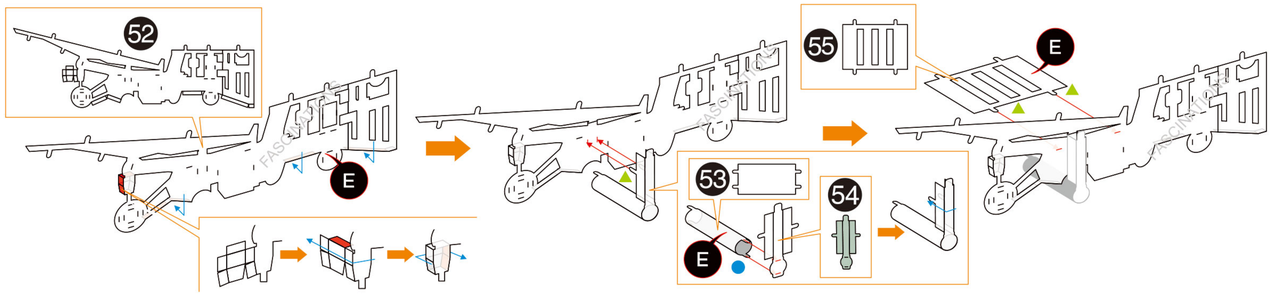
52
E
55
E
53
54
E

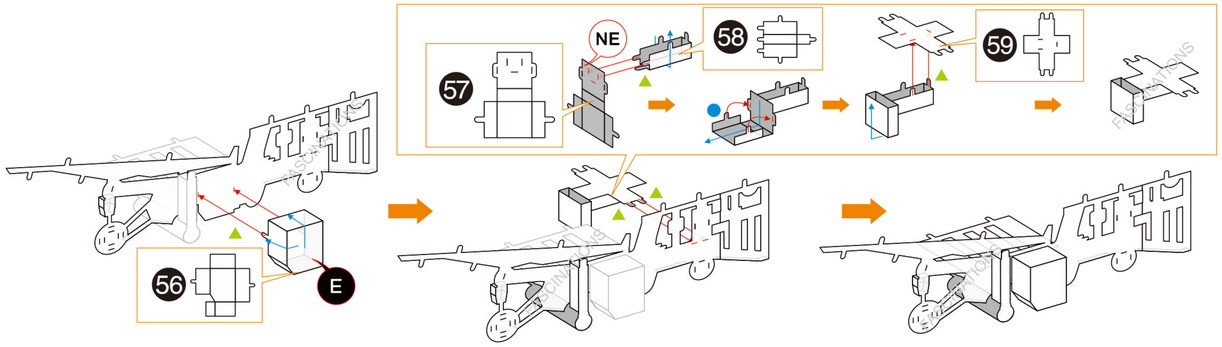
57
NE
58
59
56
E

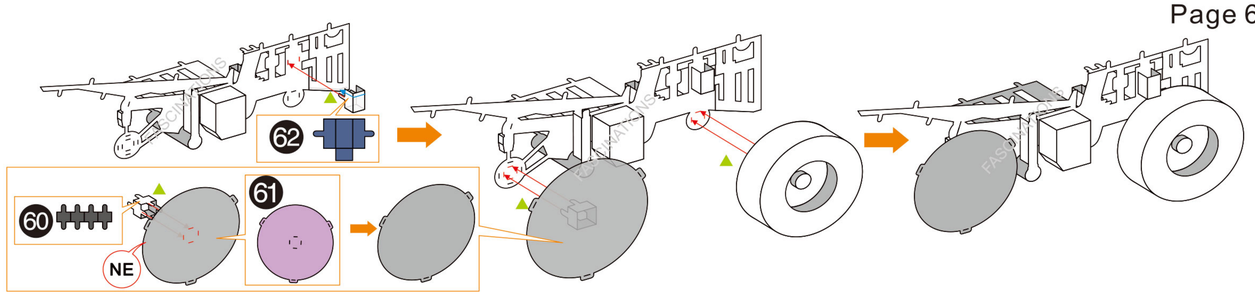
62
60
NE
61

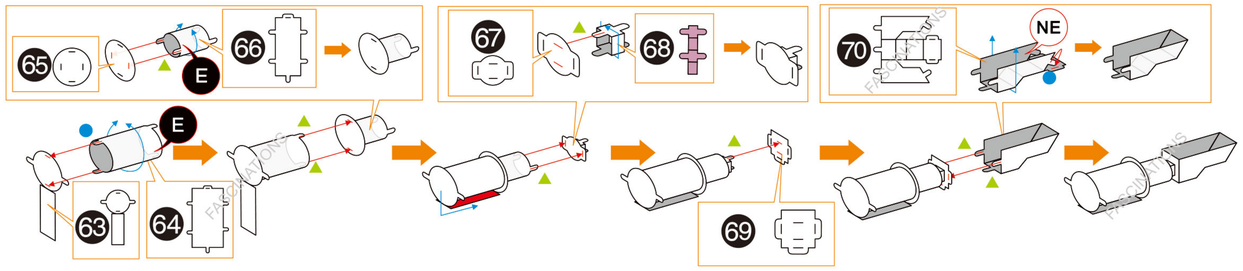
65
E
66
67
68
70
NE
E
63
64
69

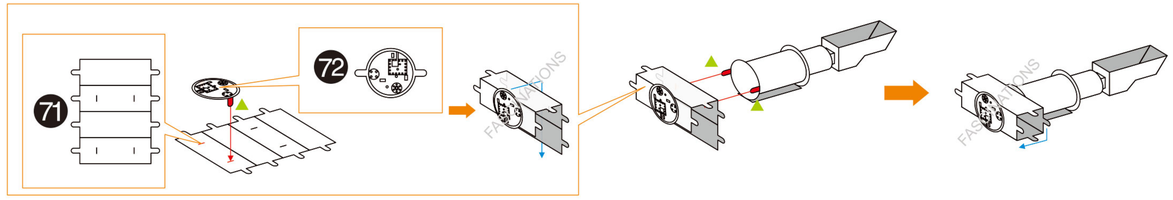
71
72

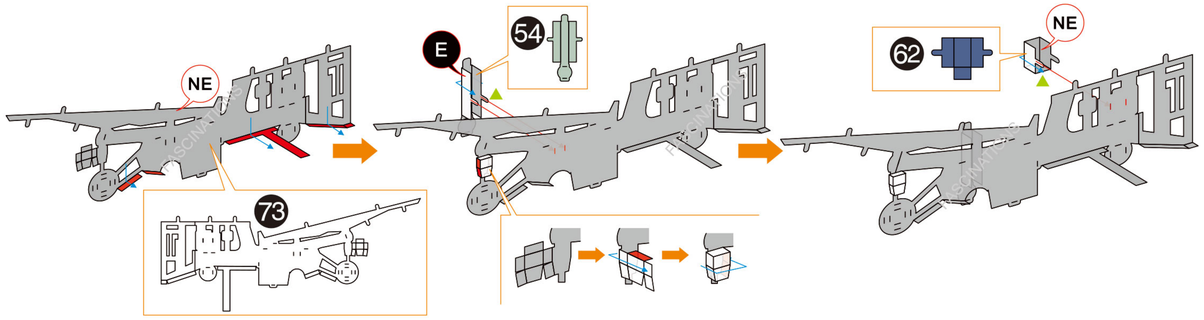
NE
E
54
62
NE
73

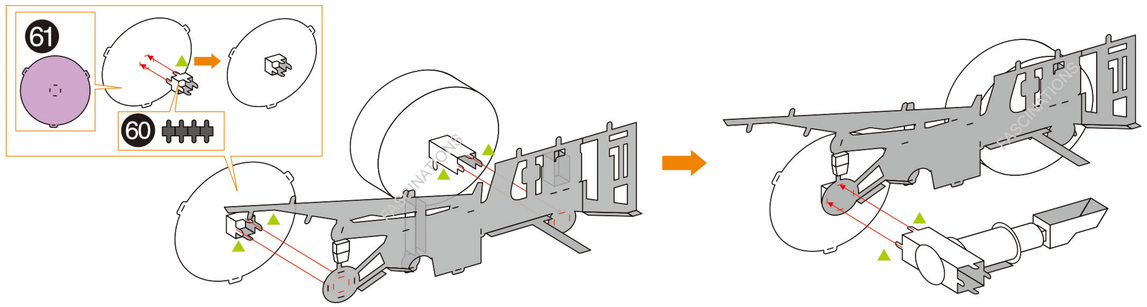
61
60

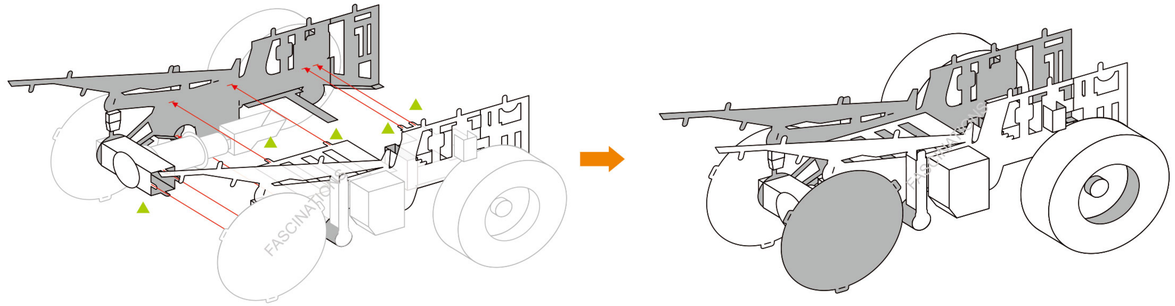

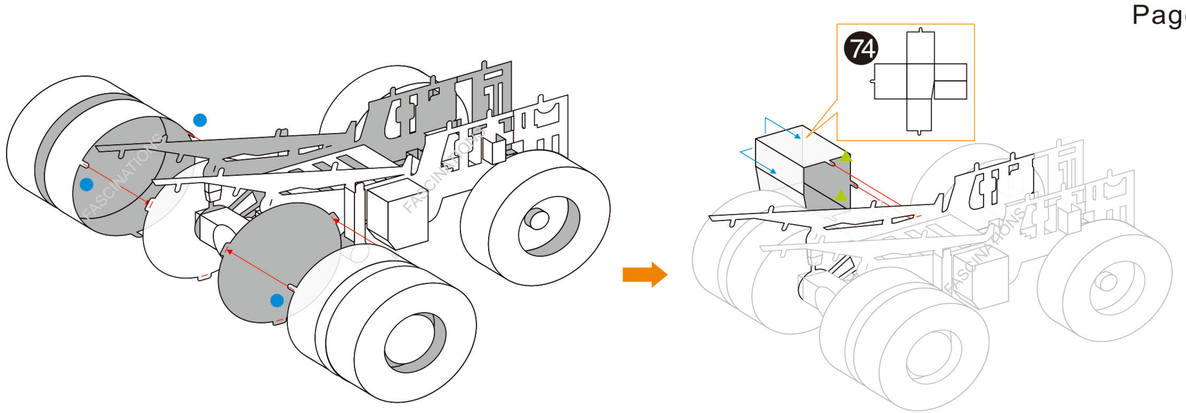

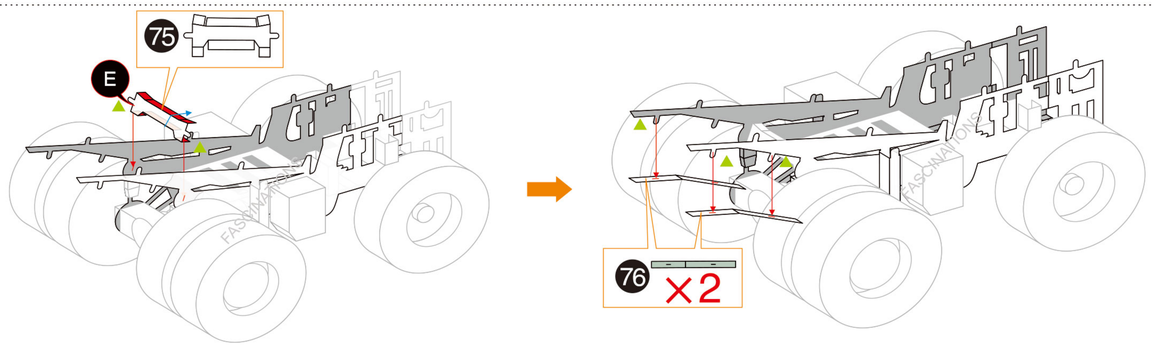

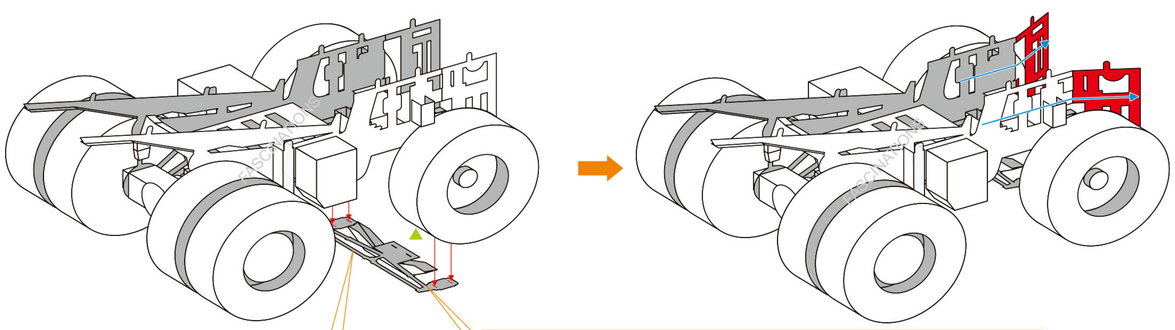

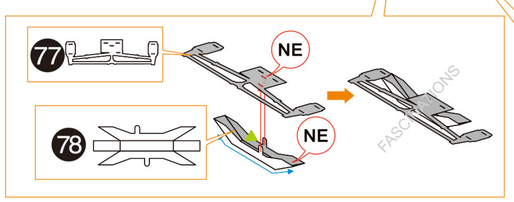

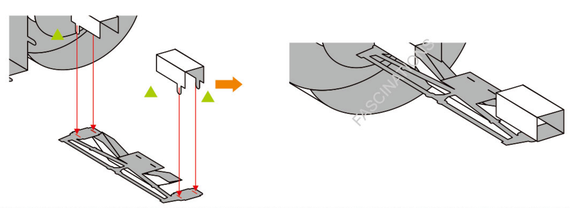

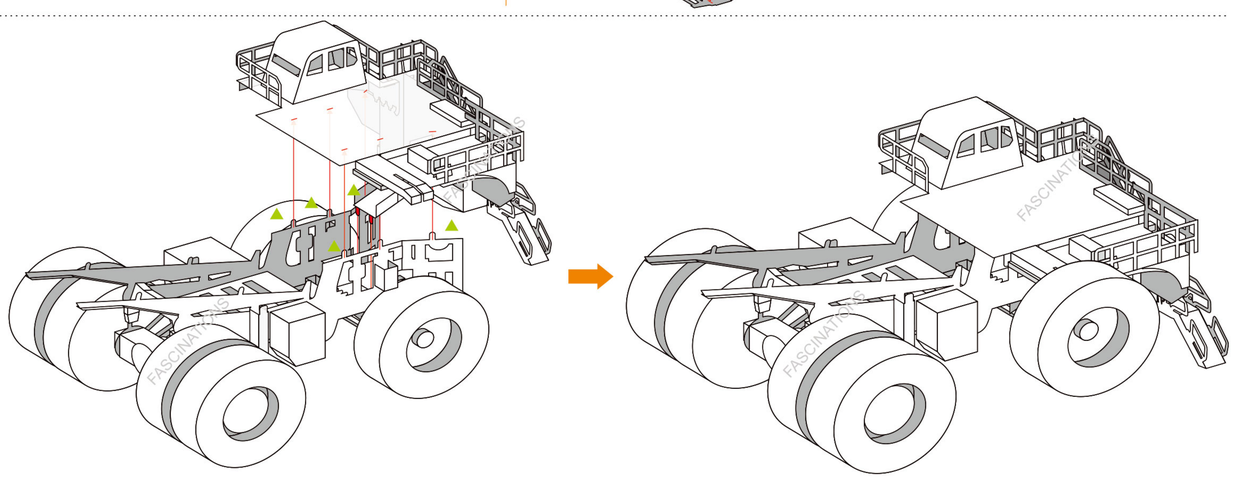

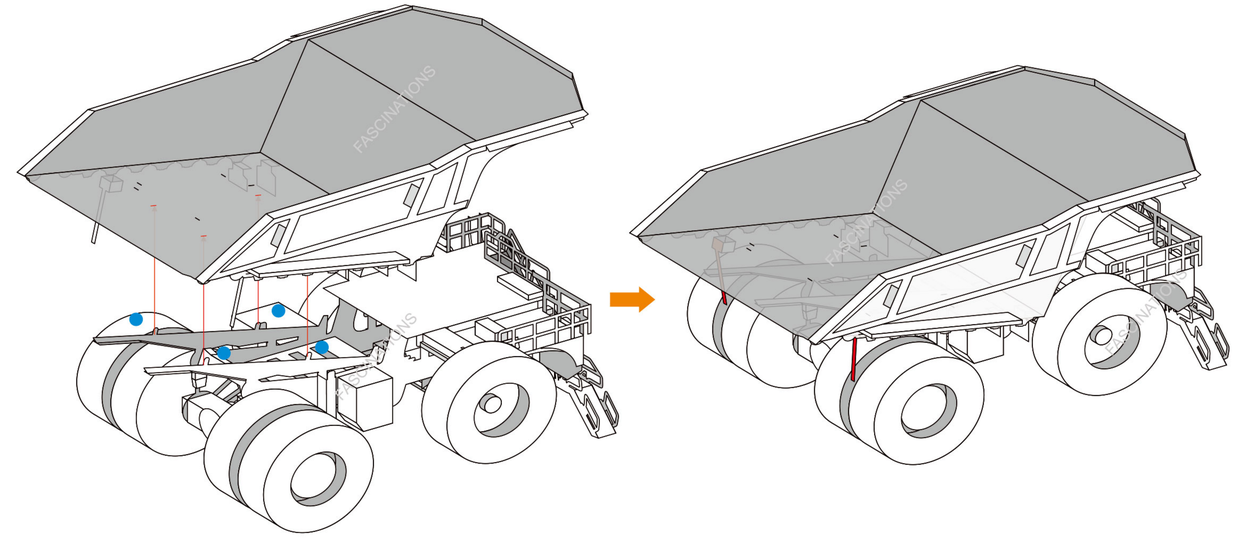

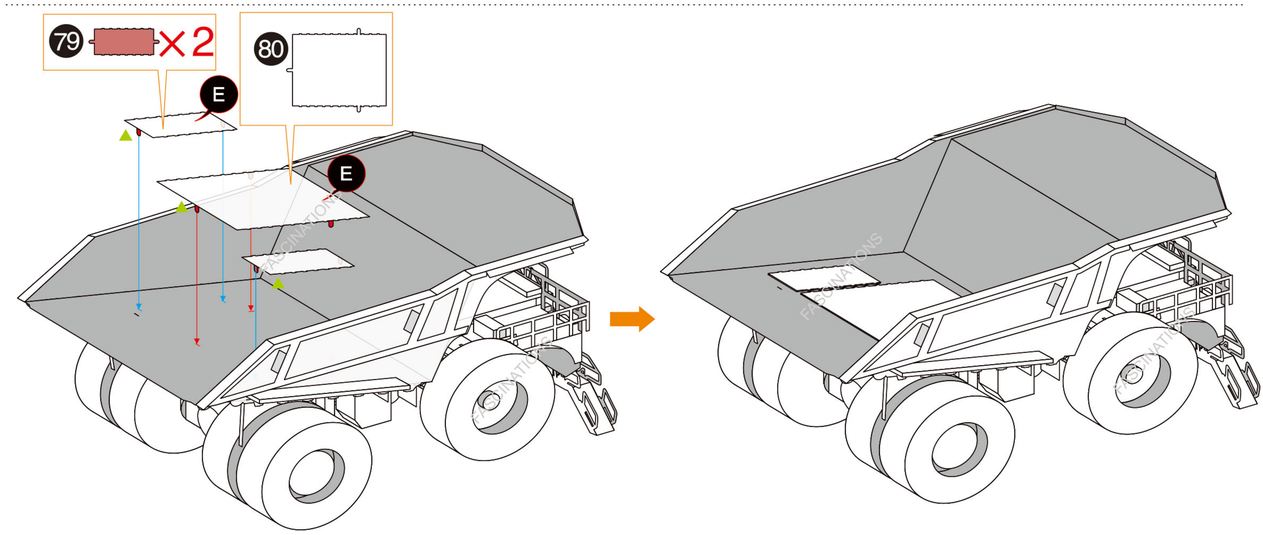

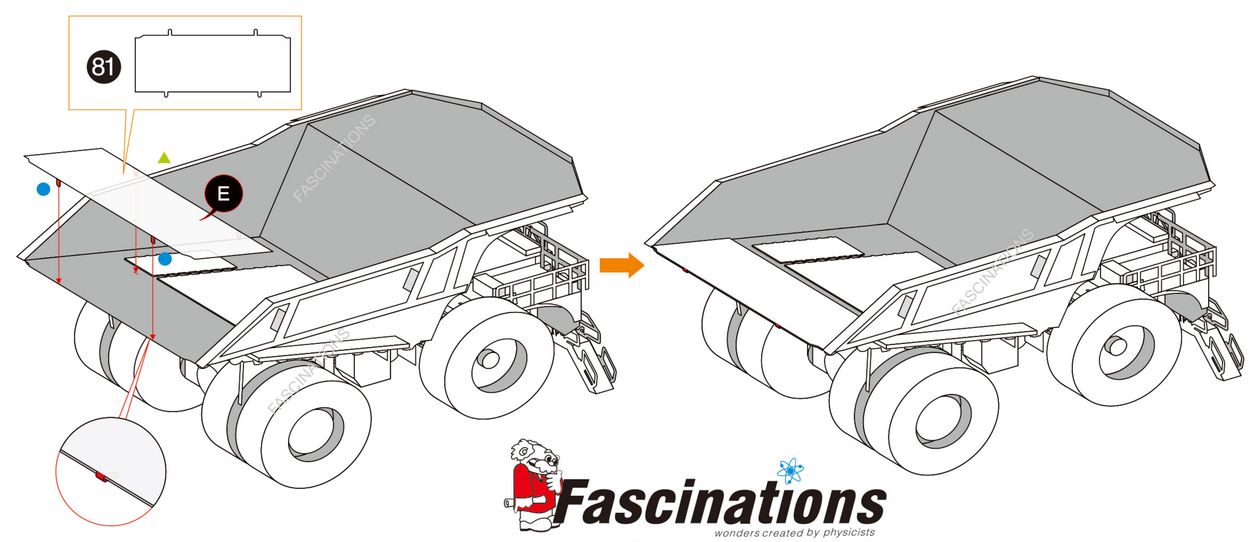

Fascinations
wonders created by physicists
www.fascinations.com/metalearth
© 2016,Fascinations Seattle,WA