Metal Earth®

3D METAL MODEL KITS

CAT®

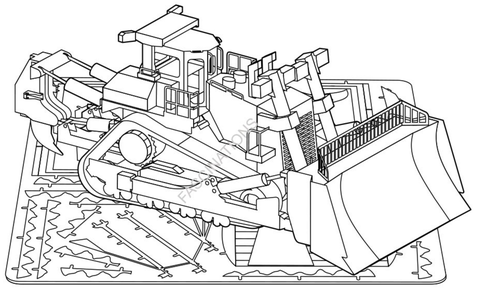

Dozer

Item No. MMS425

360° view

It is highly recommended that you visit
www.metalearth.com/360/mms425
to see the completed model before assembling your own

Metal sheets

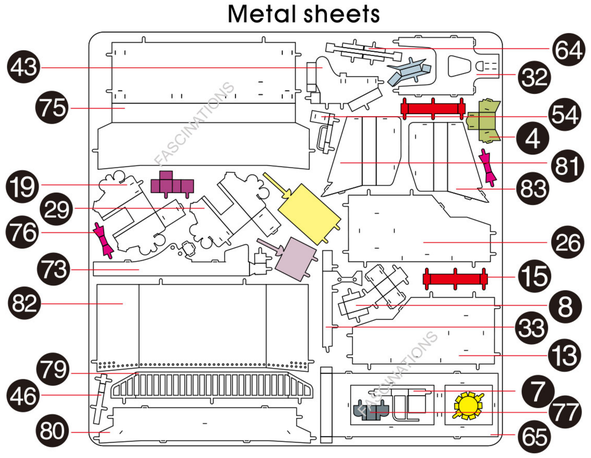

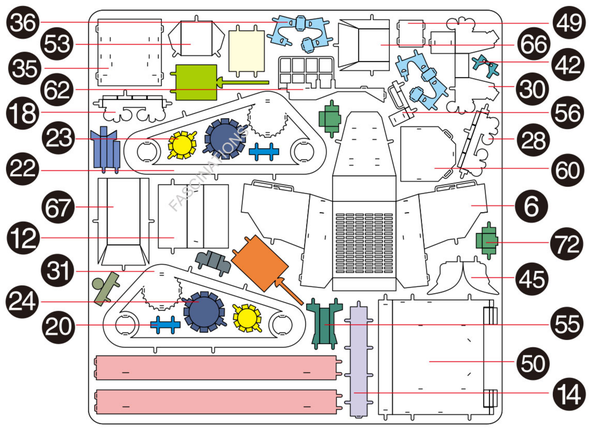

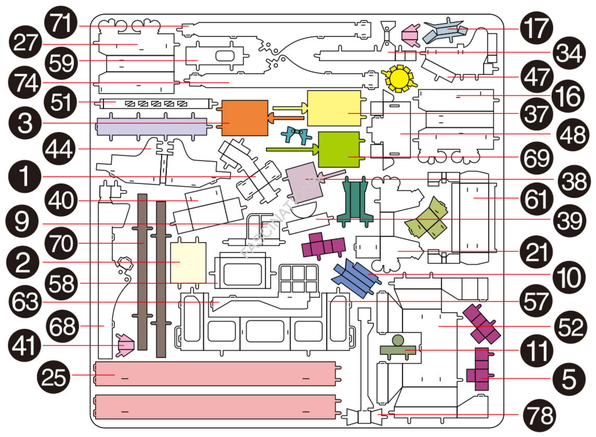

⚠ In order to avoid possible injury from sharp edges, please carefully discard the metal sheets after parts have been removed

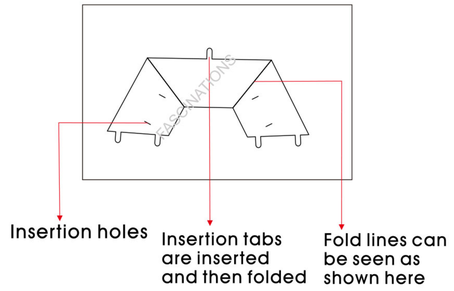

Legends:

- E — Engraved side
- NE — Non-engraved side
- Attention point
- Insert tab and bend 90 degrees
- Insert tab and twist 90 degrees

Assembly tip:

If needed, slightly twist tabs to hold parts together then untwist and bend them down for a nice finish

Recommended tools:

-Wire cutters: helpful for taking parts from the metal sheets.

-Tweezers or needle nose pliers: helpful for folding parts, bending and twisting tabs.

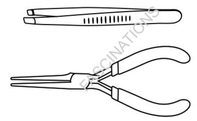

Assembly Flow Chart

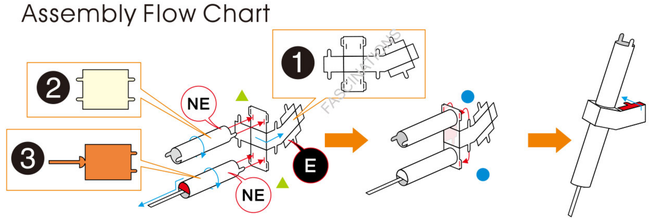

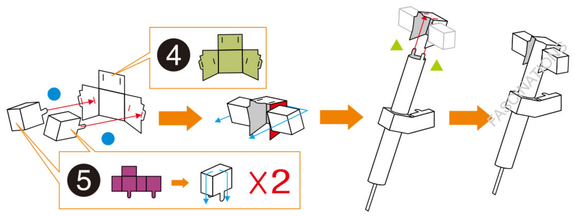

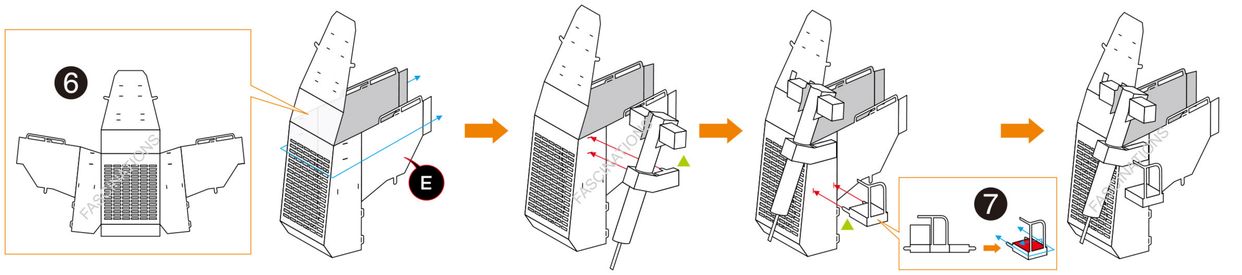

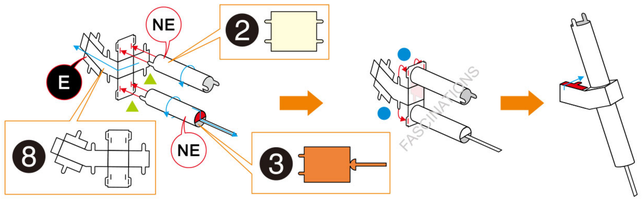

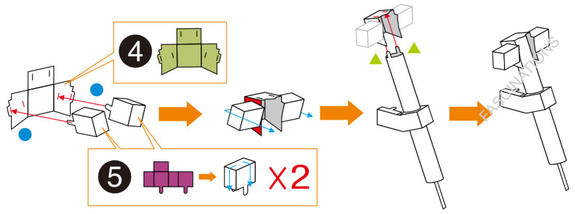

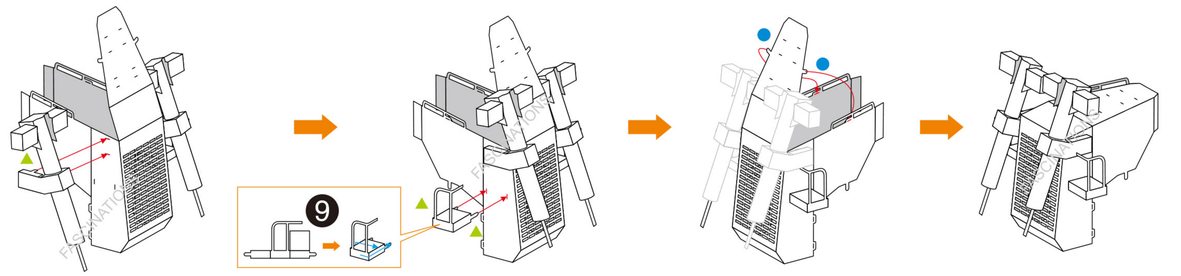

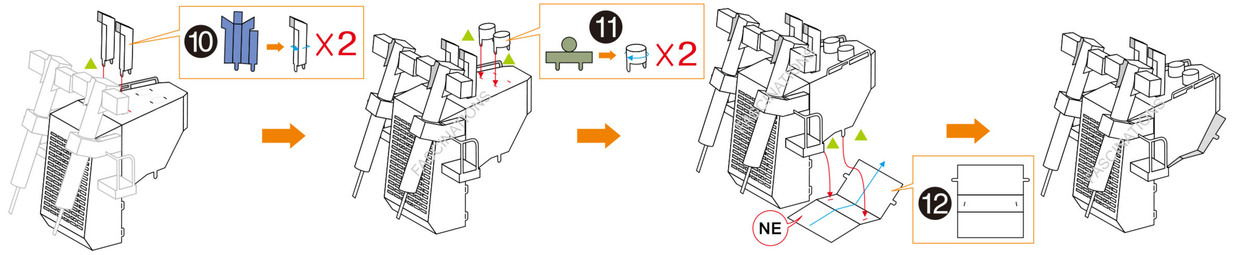

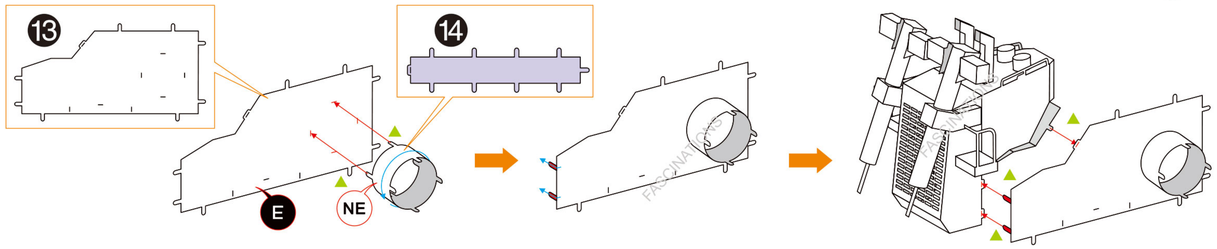
13
14
E
NE

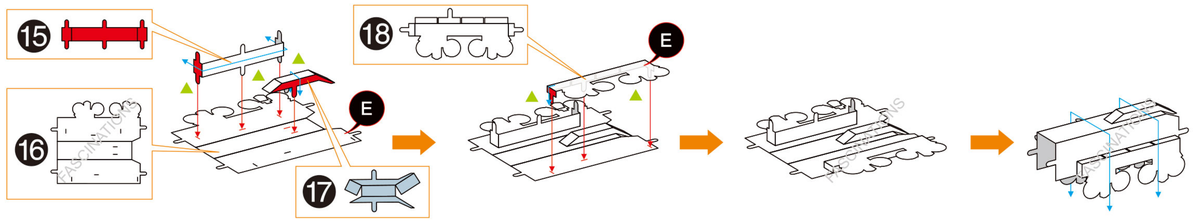
15
16
17
18
E
E

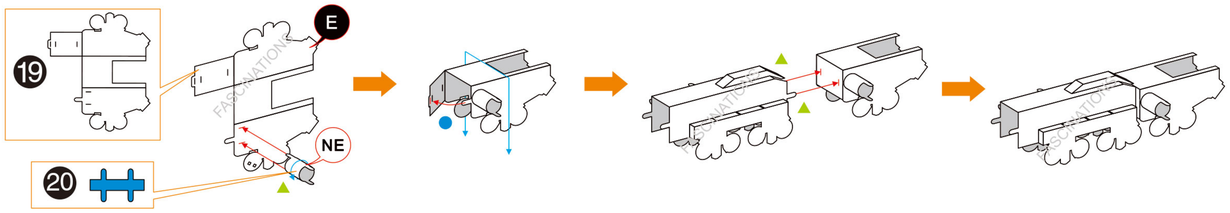
19
20
E
NE

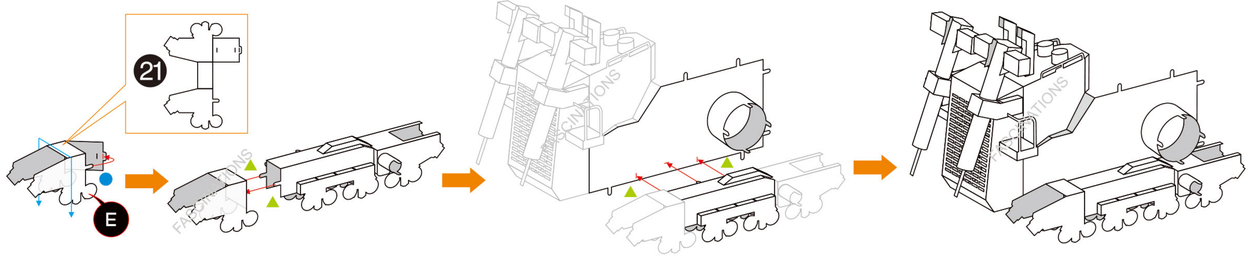
21
E

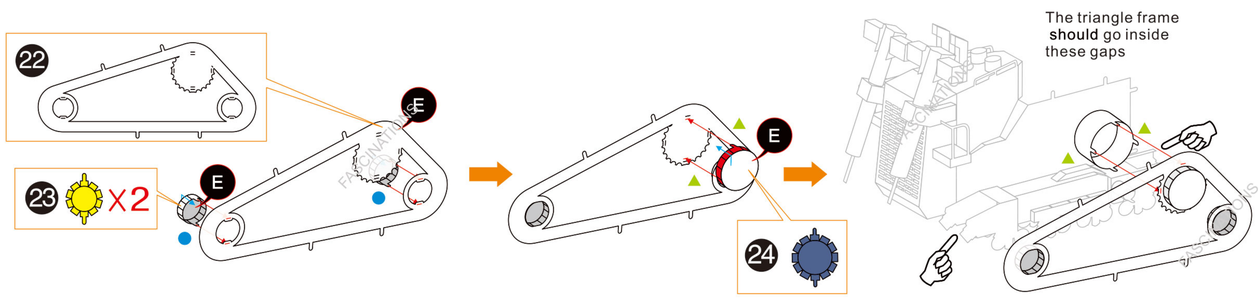
22
23
X2
24
E
E
E
The triangle frame
should go inside
these gaps

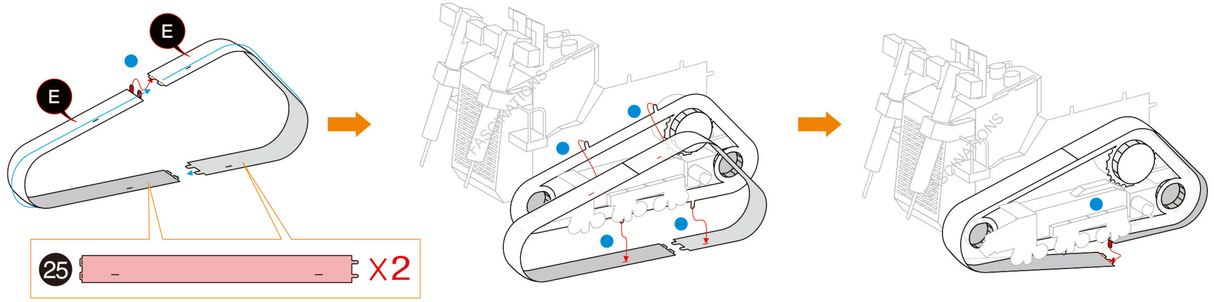
E
E
25
X2

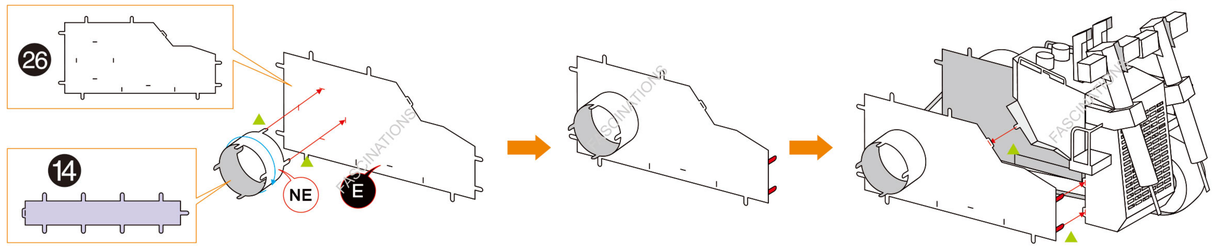
26
14
NE
E

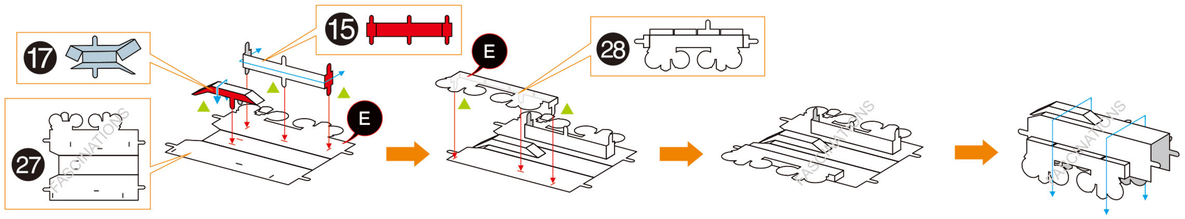
17
27
15
E
E
28

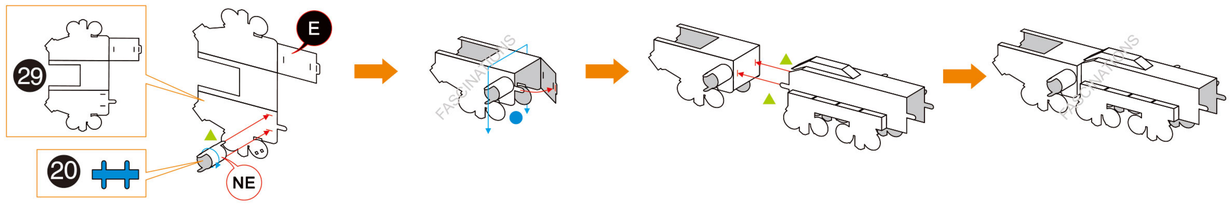
29
20
E
NE

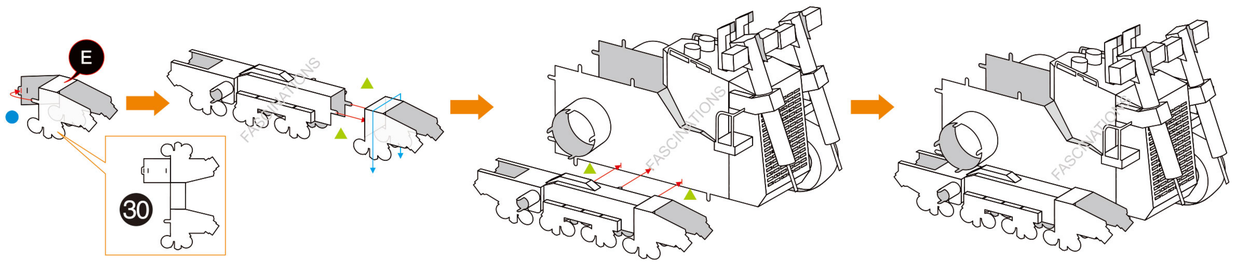
E
30

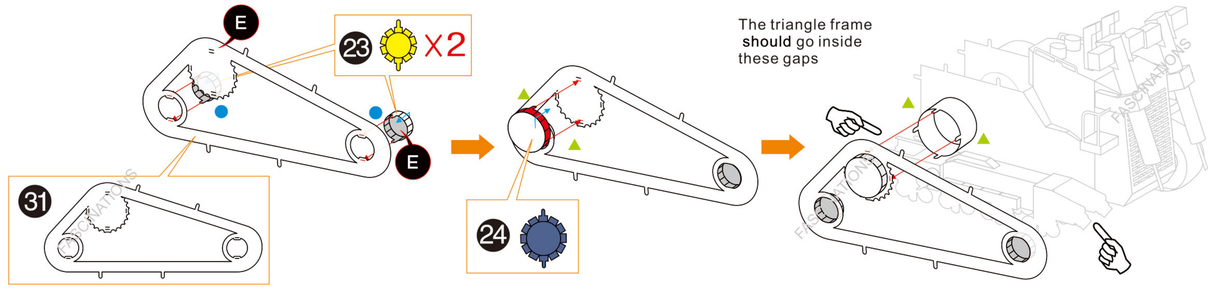
E
23
X2
E
31
24
The triangle frame
should go inside
these gaps

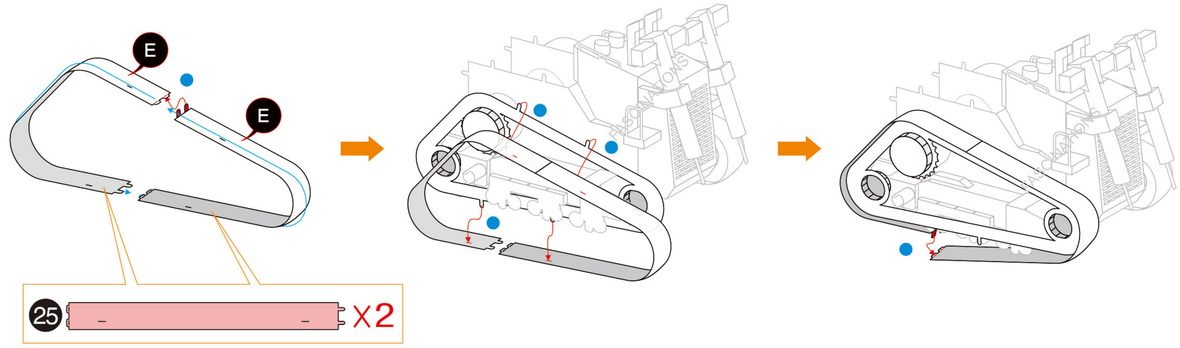
E
E
25
X2

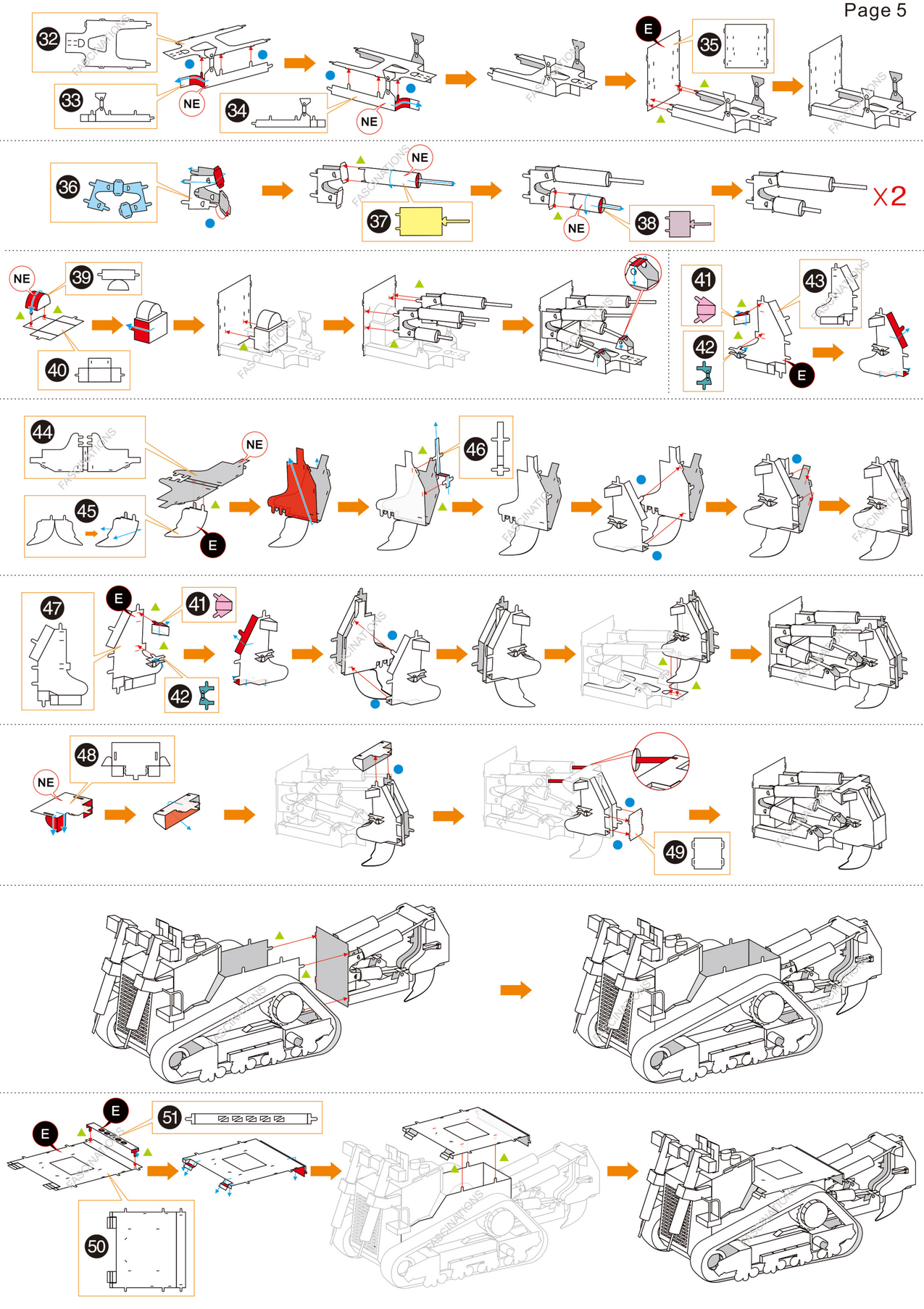
32
33
NE
34
NE
E
35
36
NE
37
NE
38
X2
NE
39
40
41
42
E
43
44
NE
45
E
46
47
E
41
42
48
NE
49
50
E
E
51

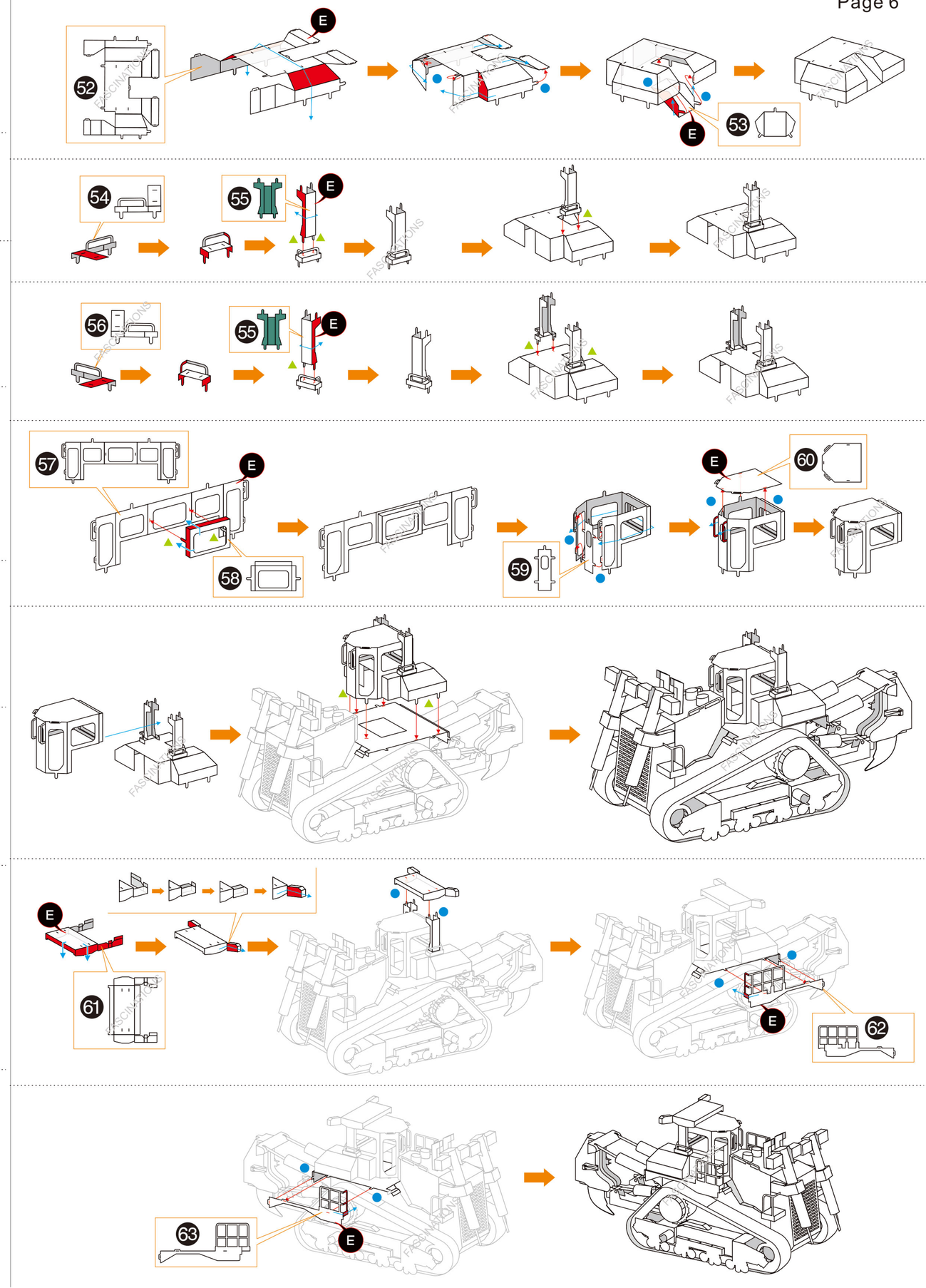
52
E
E
53
54
55
E
56
55
E
57
E
58
59
E
60
63
E
61
E
62

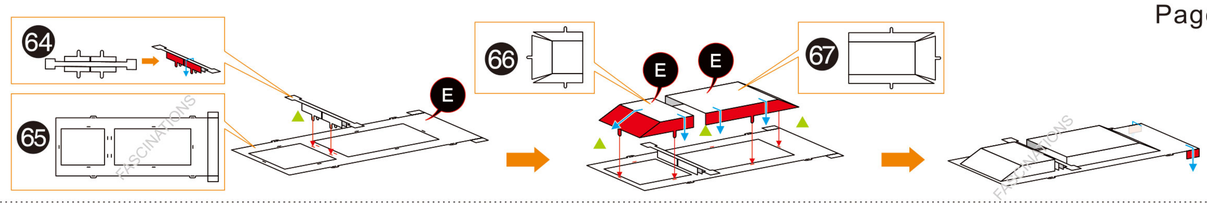

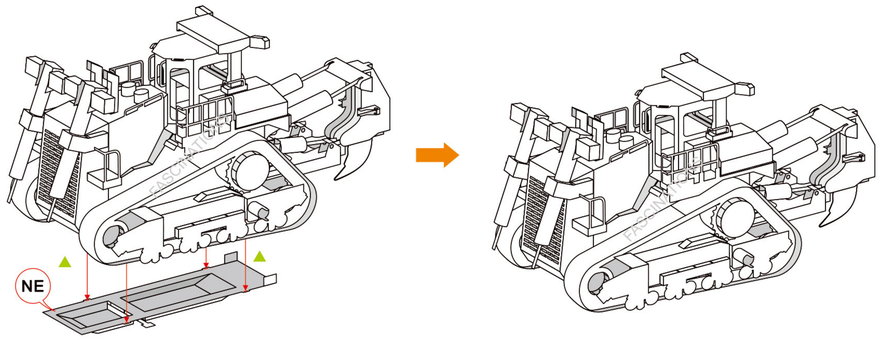

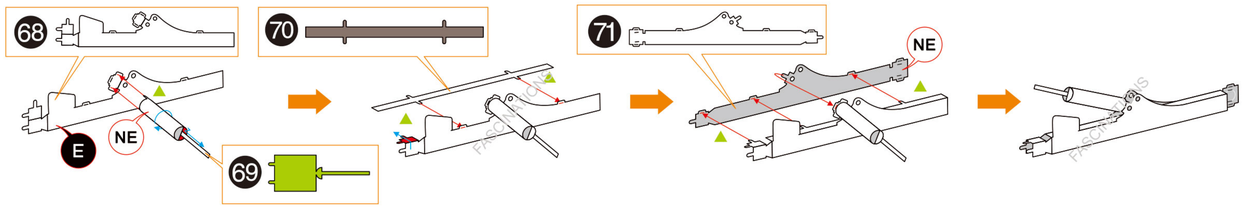

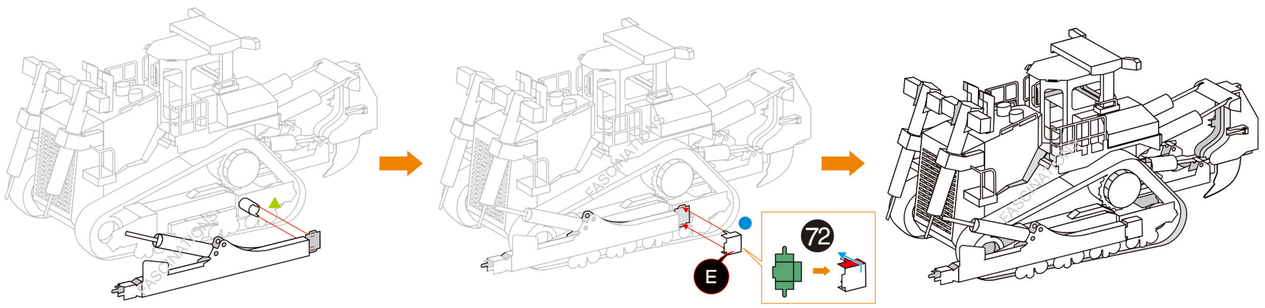

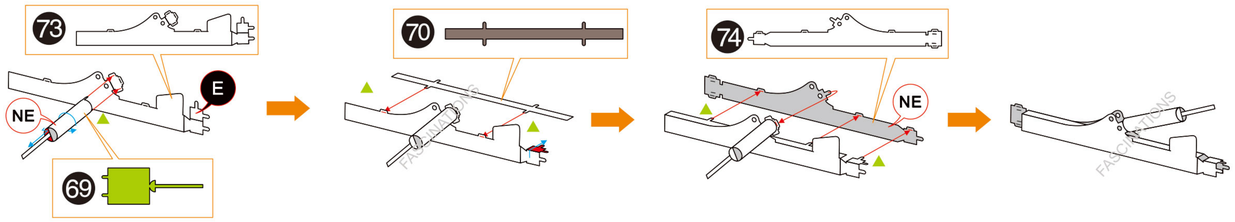

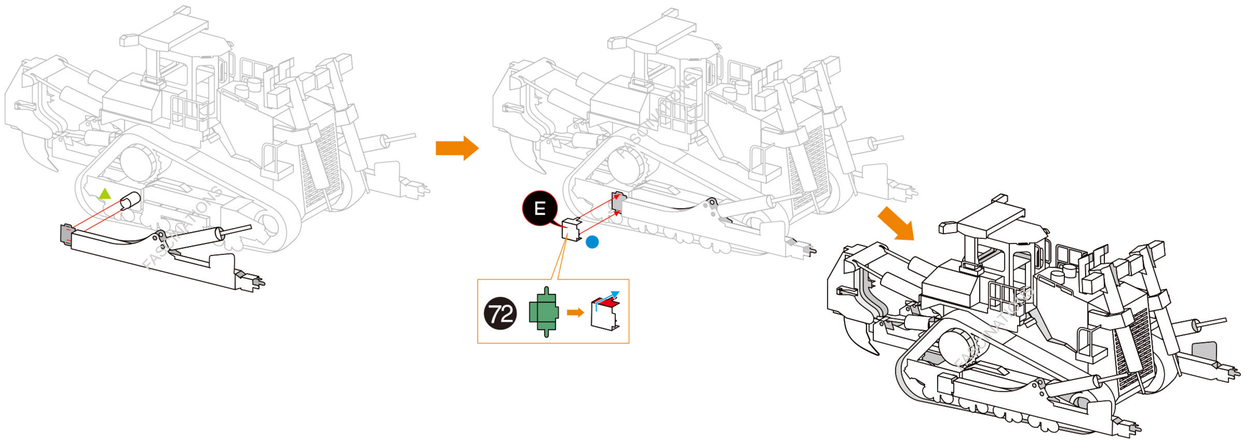

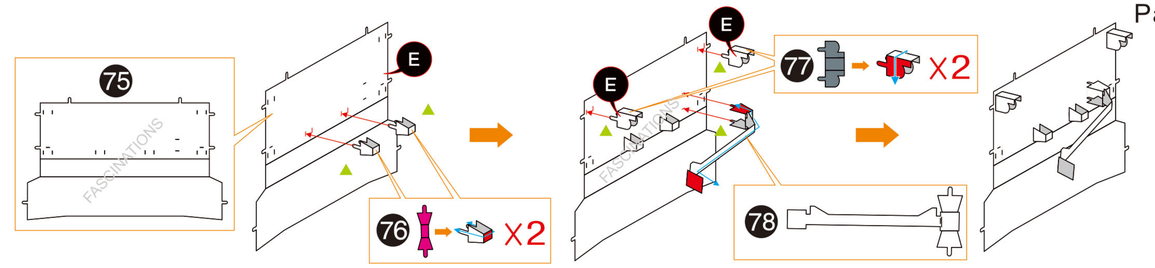

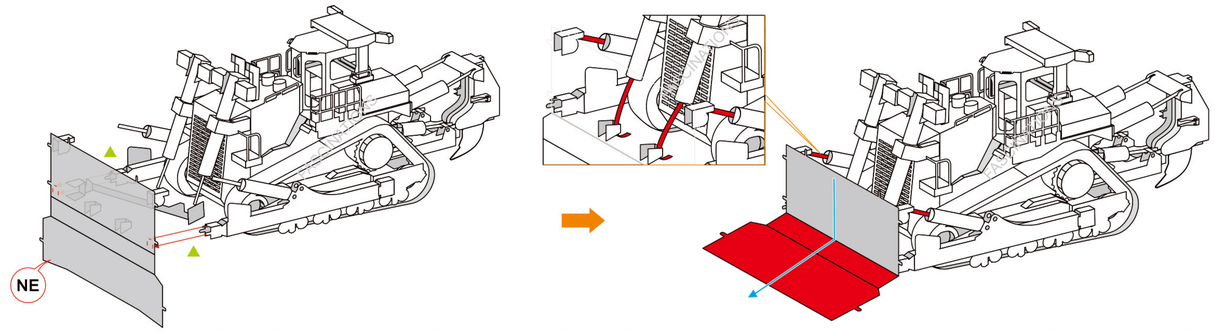

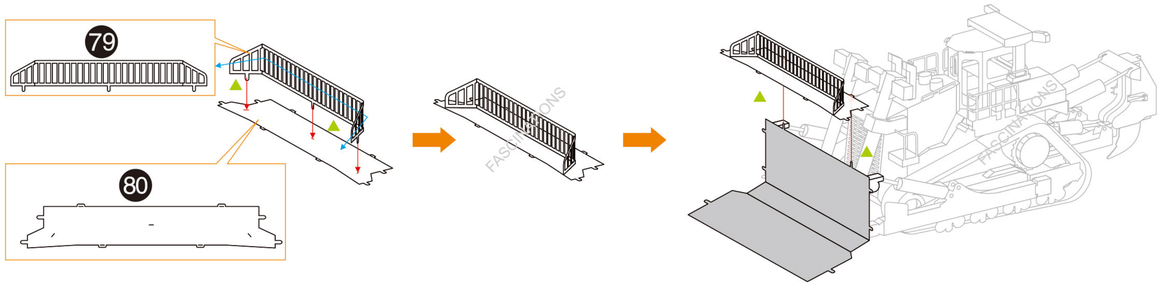

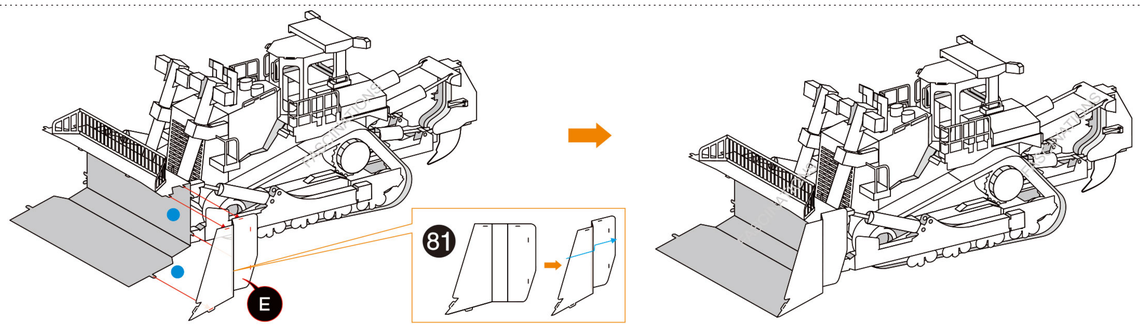

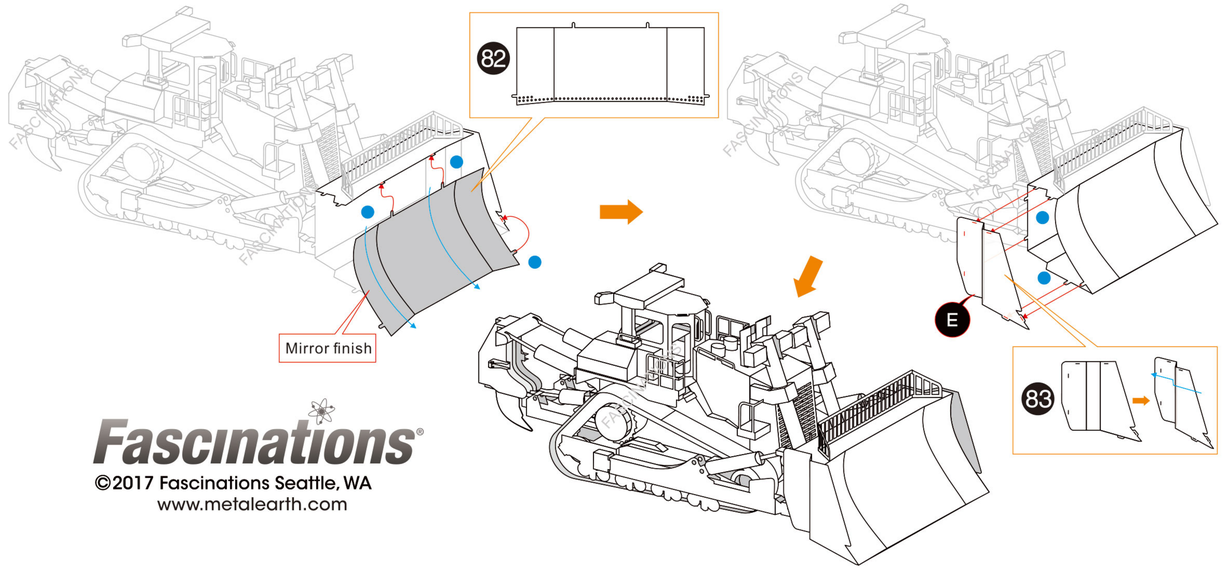

Fascinations®
©2017 Fascinations Seattle, WA
www.metalearth.com