Metal Earth®

Premium Series

360° view

It is highly recommended that you visit **www.metalearth.com/360/icx229** to see the completed model before assembling your own

STAR WARS™

www.starwars.com

© & ™ Lucasfilm Ltd.

ICX229

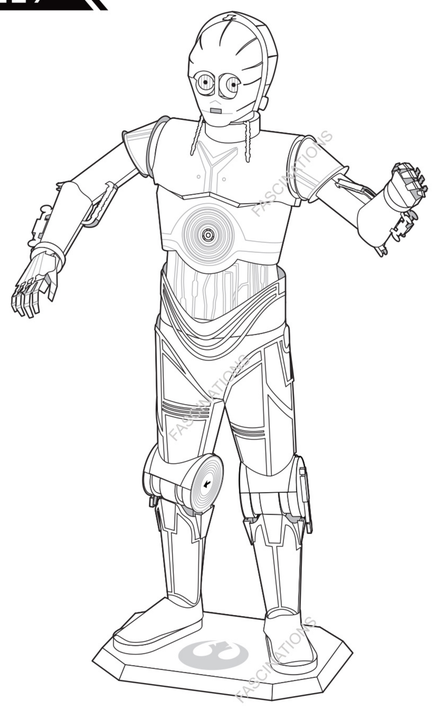

C-3PO™

TO CREATE THE BEST CONNECTIONS

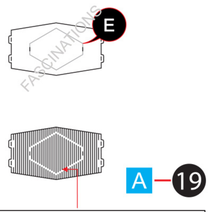

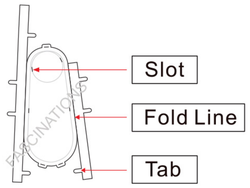

Legends:

- E — Engraved/Color side
- NE — Non-engraved/Silver side
- Attention point
- Insert tab and bend 90 degrees
- Insert tab and twist 90 degrees

Assembly tip:

If needed, slightly twist tabs to hold parts together then untwist and bend them down for a nice finish

Recommended tools:

-Wire cutters: helpful for taking parts from the metal sheets.

-Tweezers or needle nose pliers: helpful for folding parts, bending and twisting tabs.

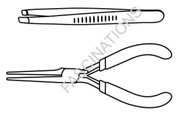

ASSEMBLY STEPS

Step 1

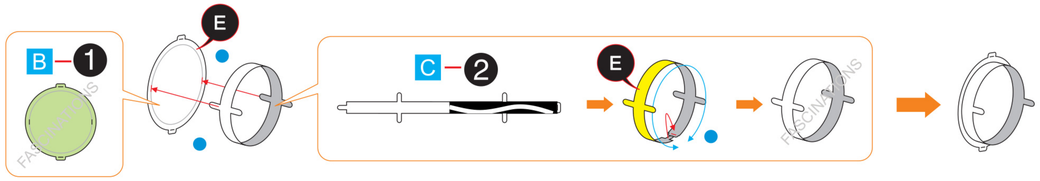

Step 2

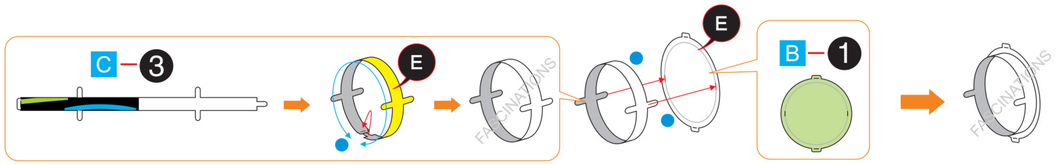

In order to avoid possible injury from sharp edges, please carefully discard the metal sheets after parts have been removed.

METAL SHEETS

Parts with same color are duplicates

A

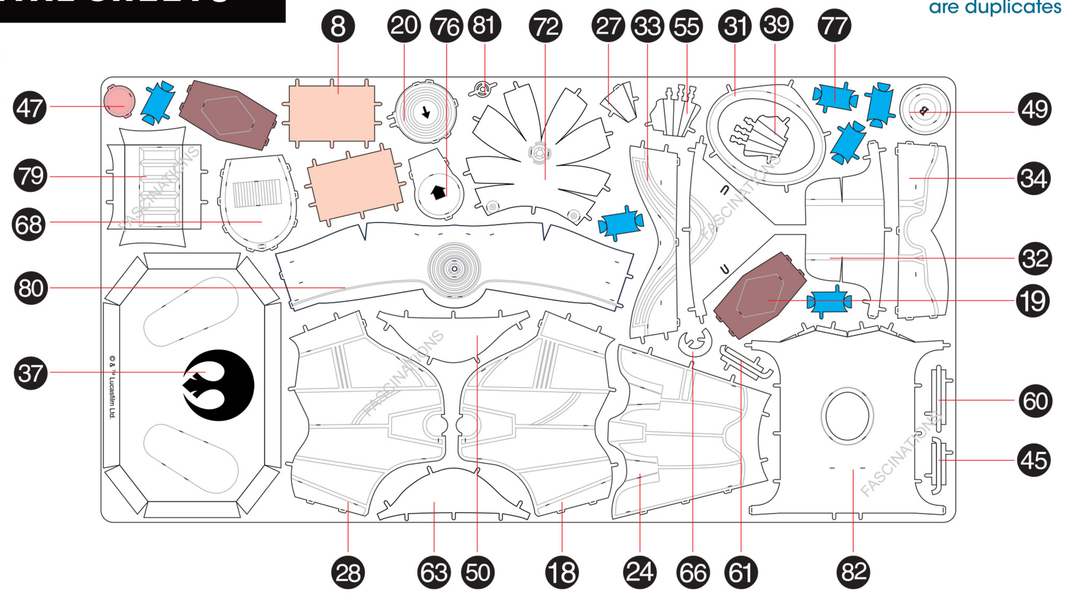

B

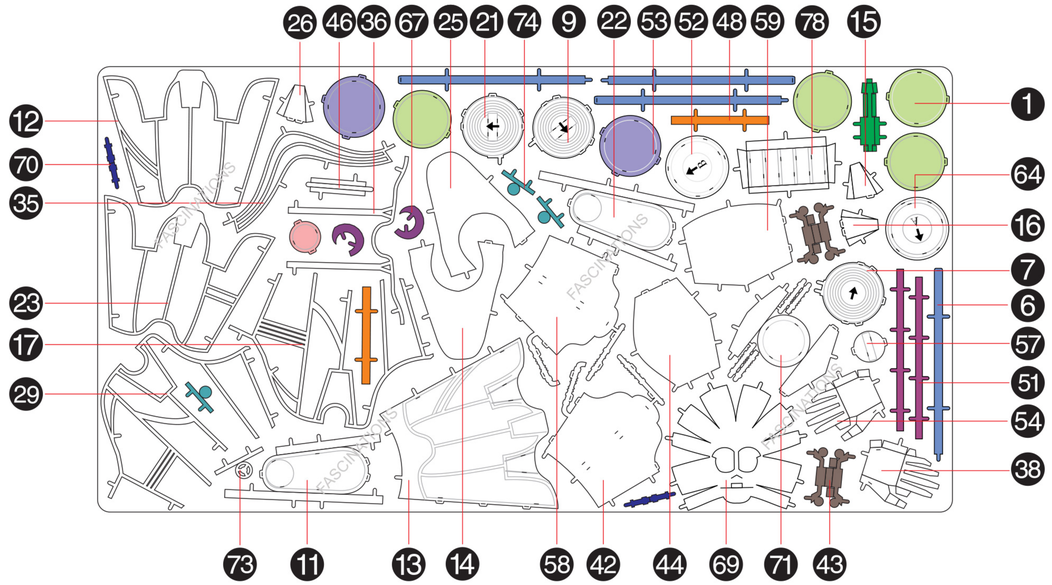

C

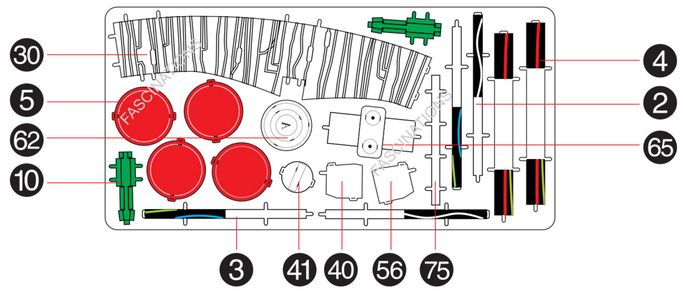

Step 3

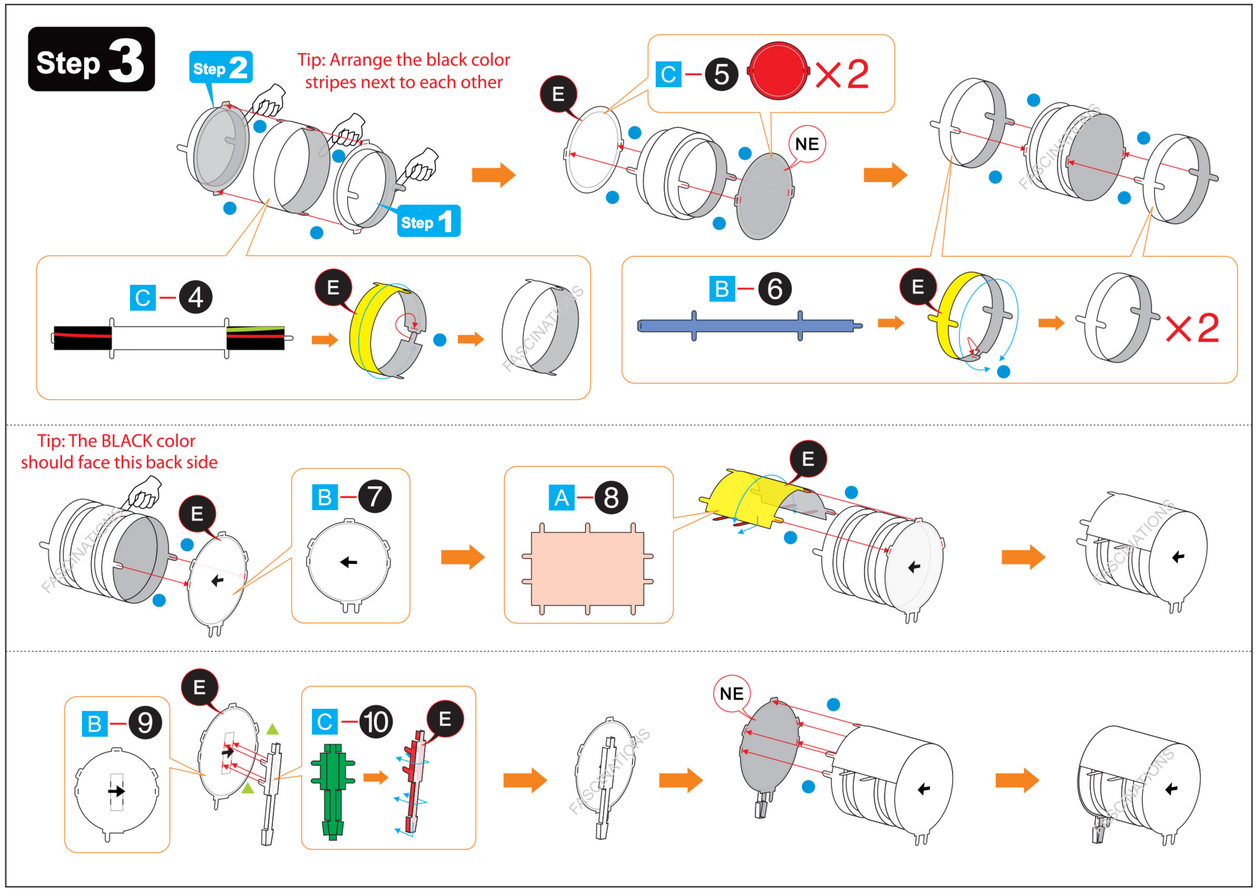

Step 4

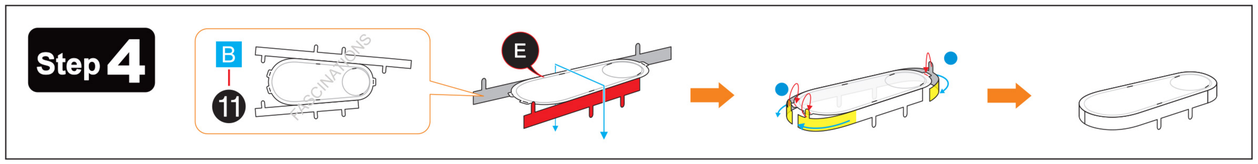

Step 5

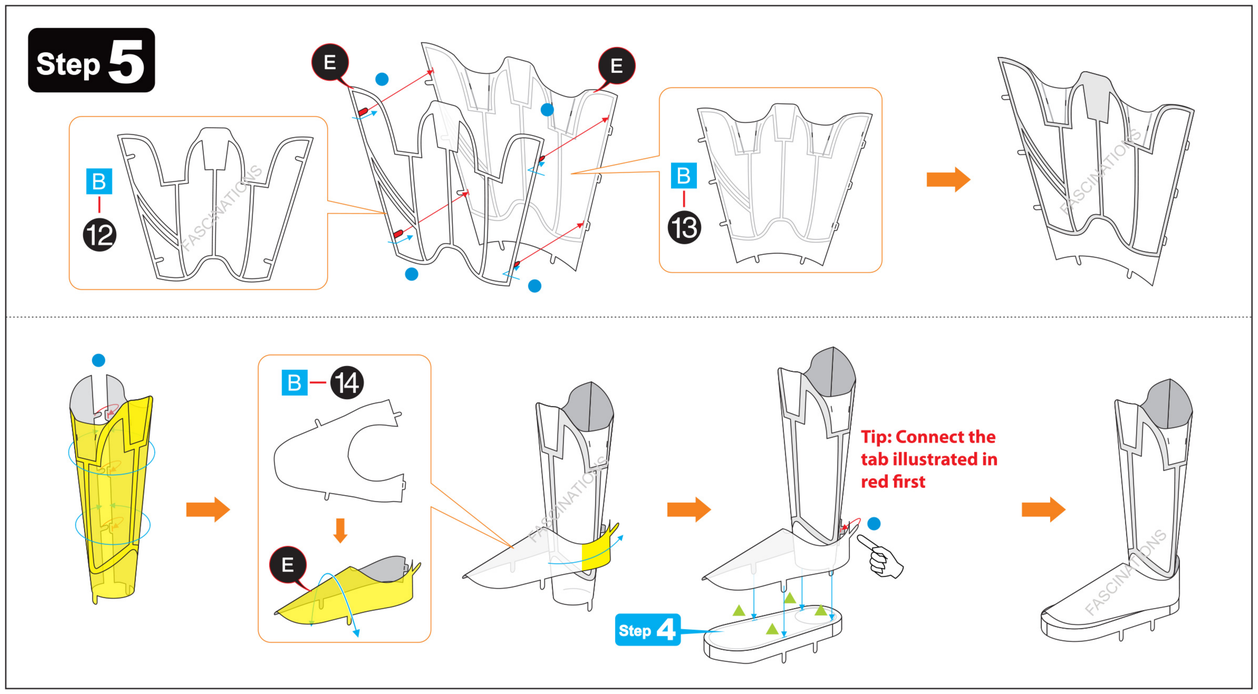

Step 6

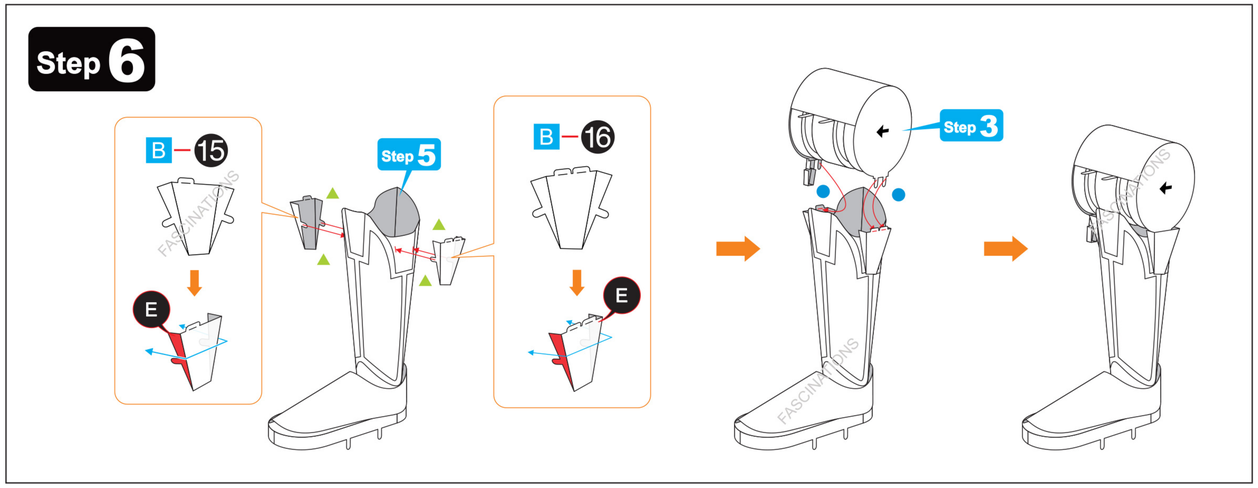

Step 7

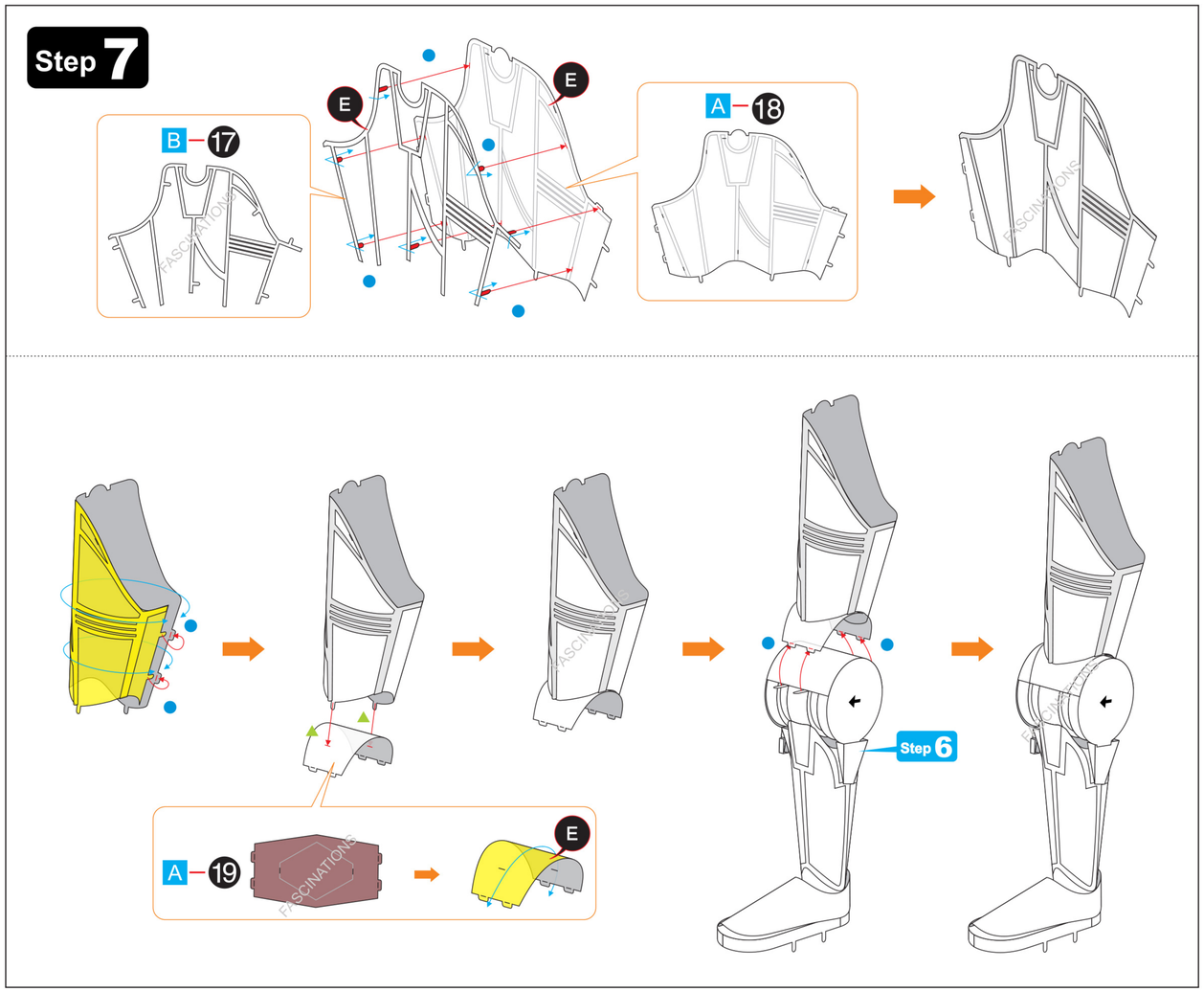

Step 8

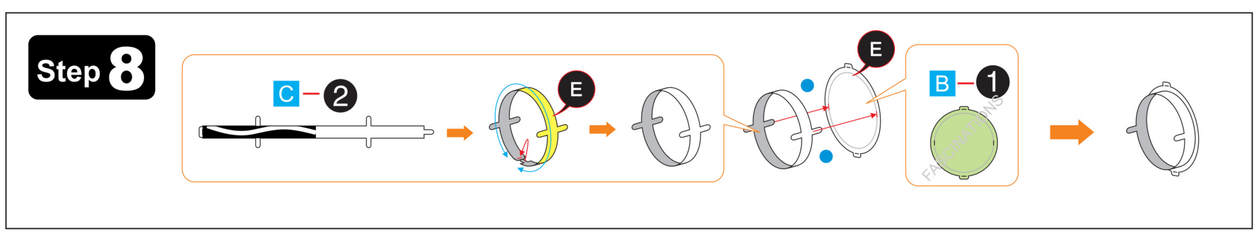

Step 9

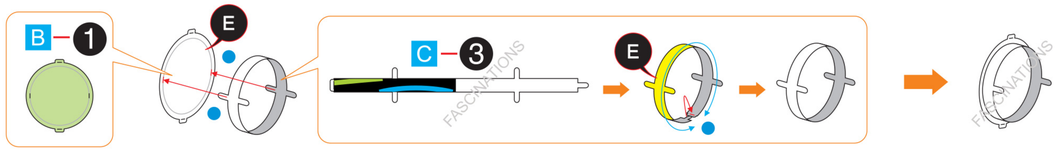

Step 10

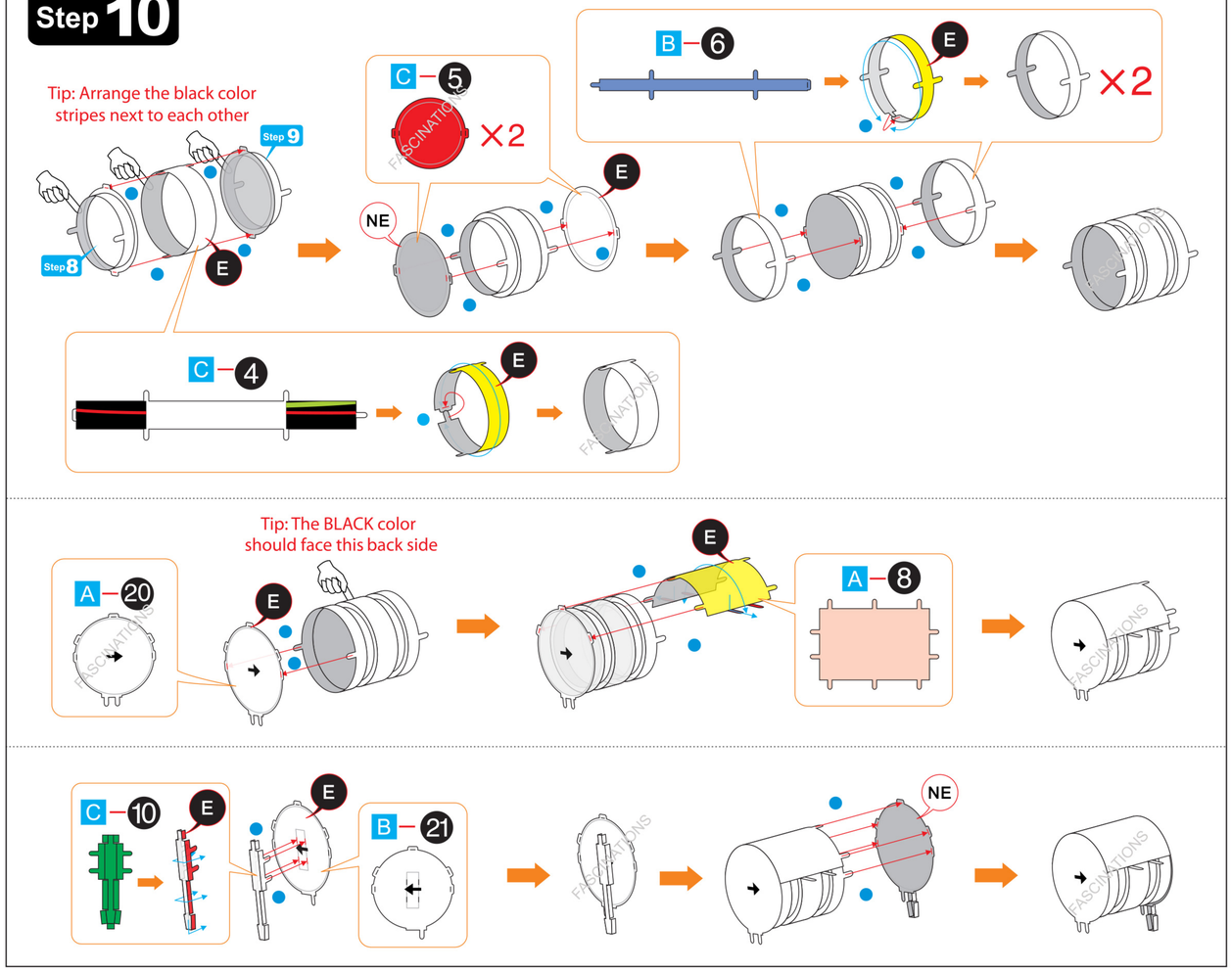

Step 11

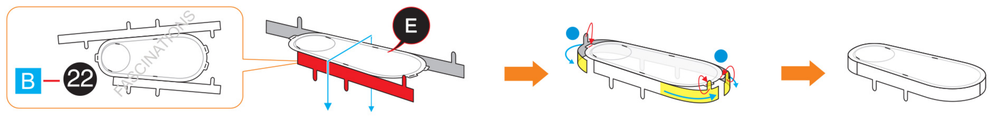

Step 12

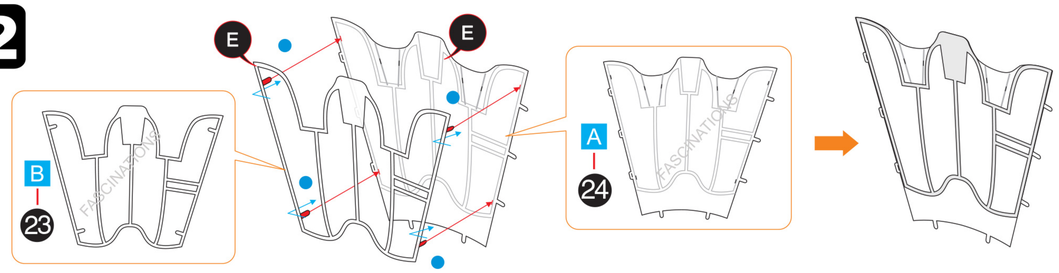

Step 13

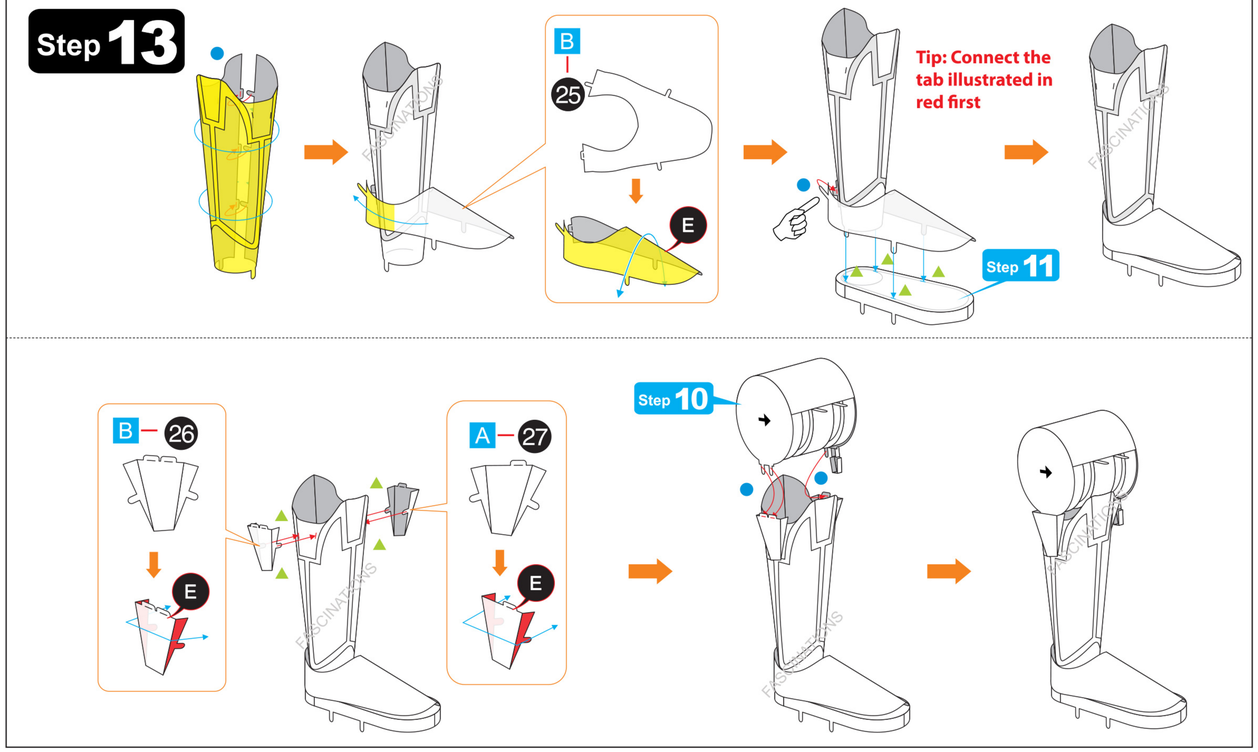

Step 14

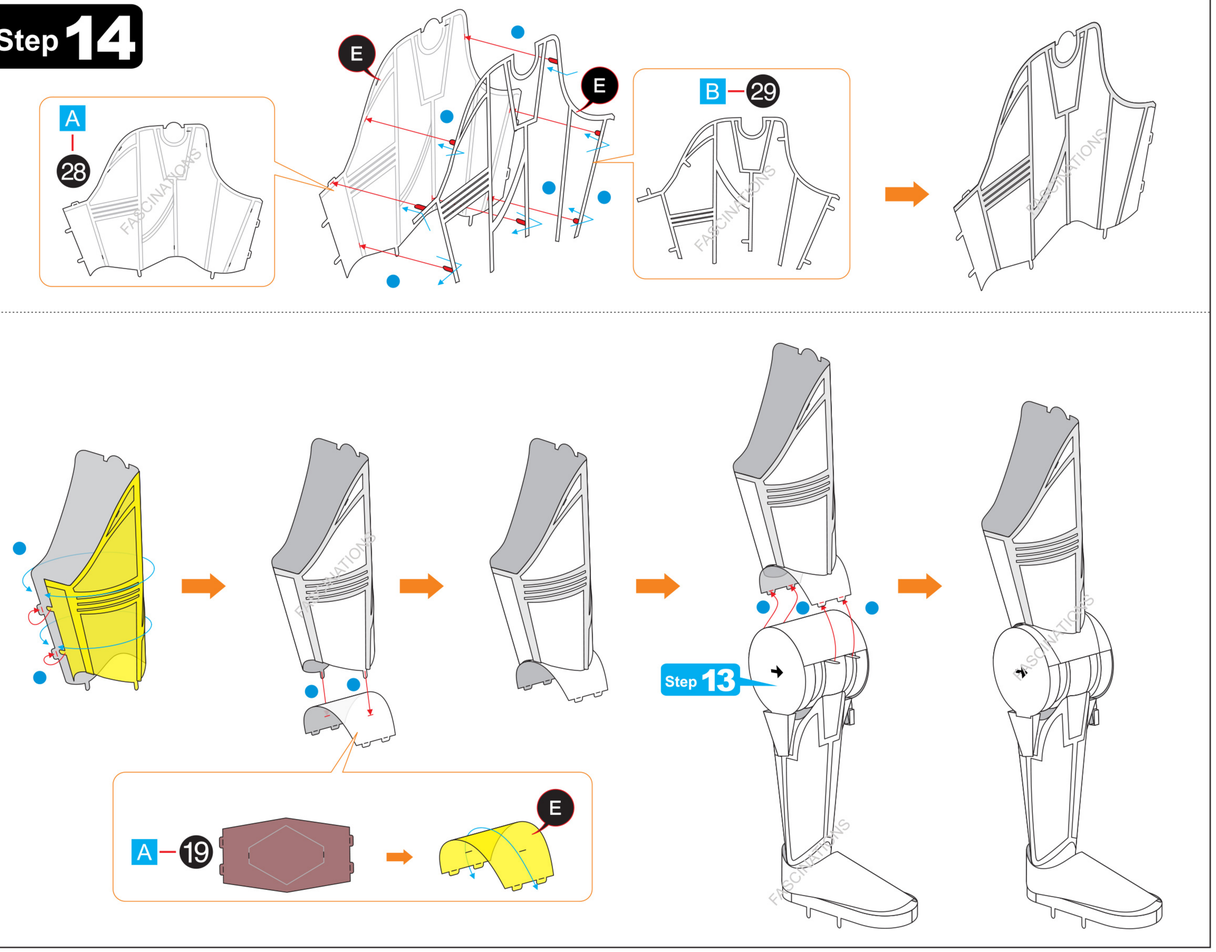

Step 15

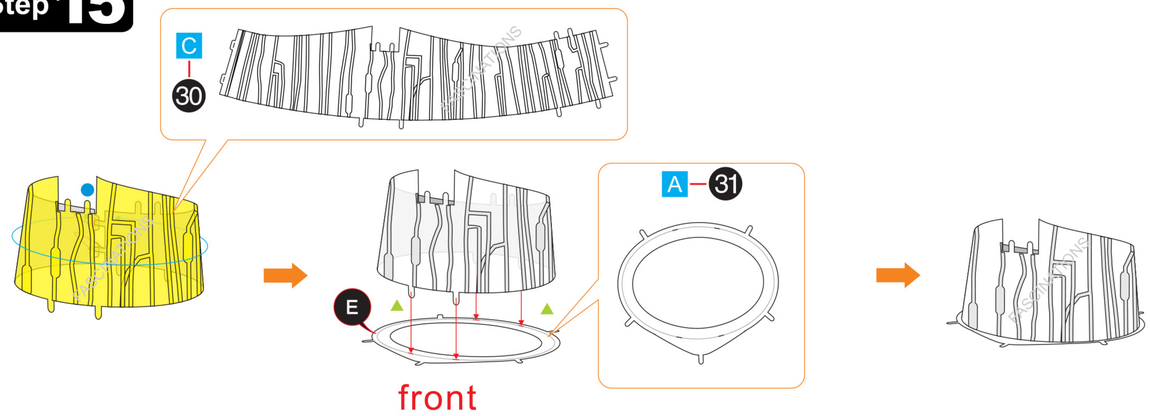

Step 16

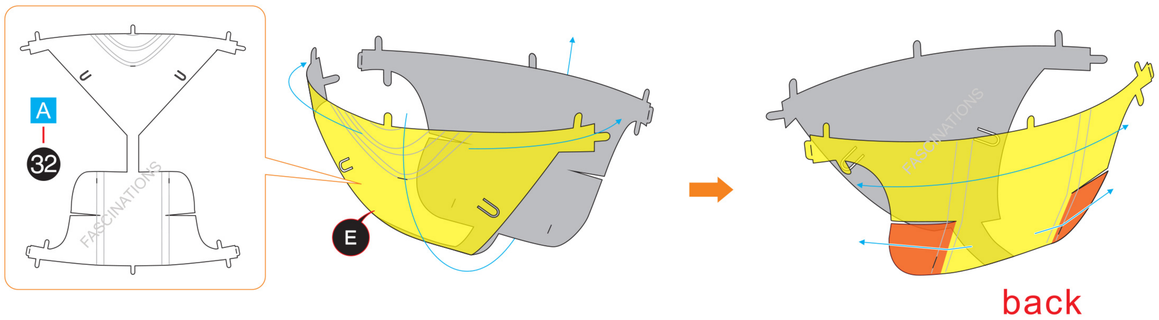

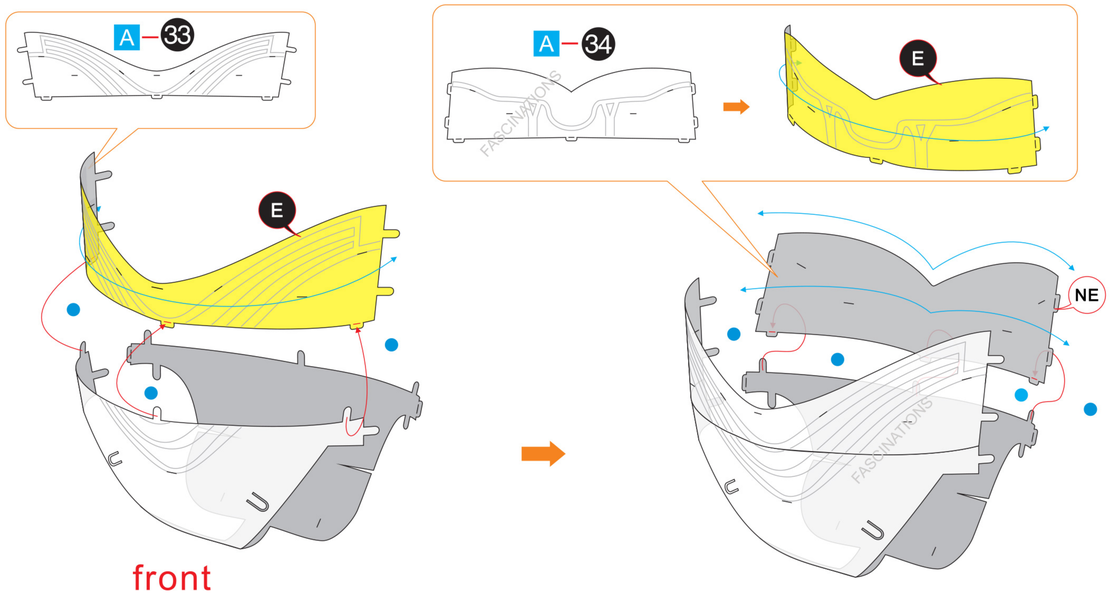

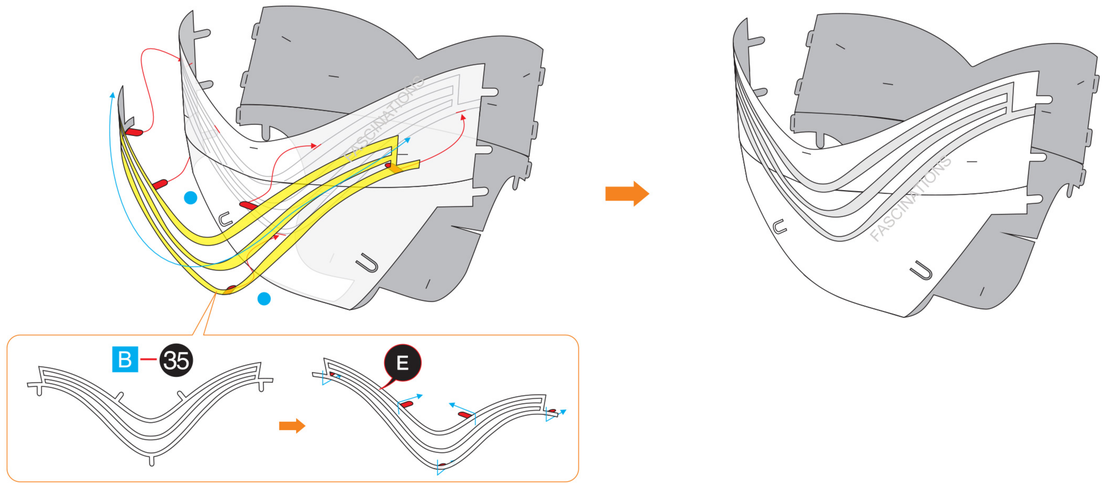

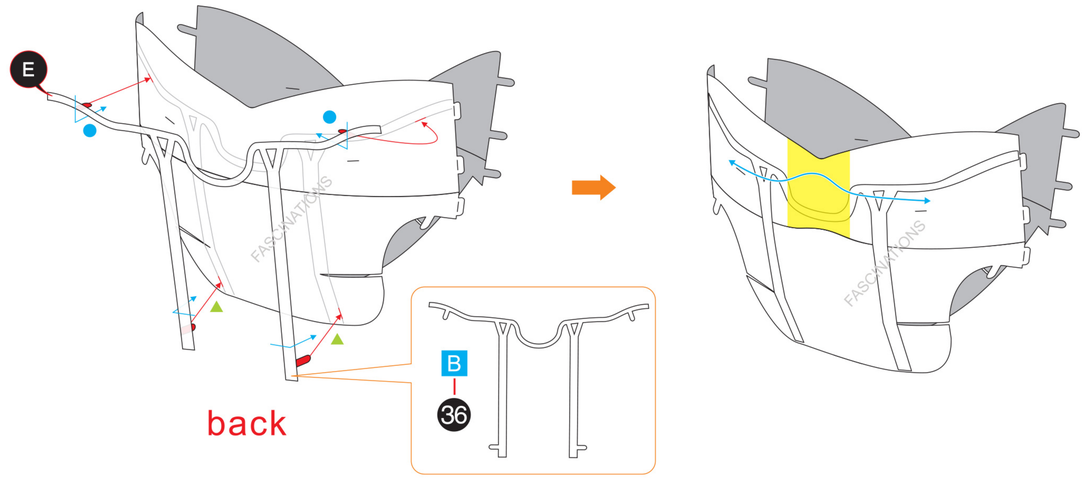

Step 17

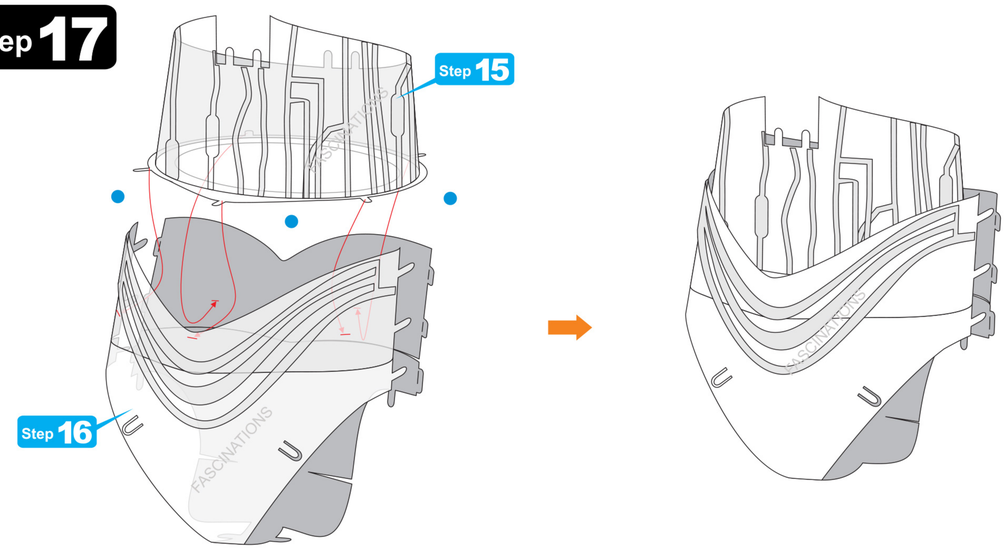

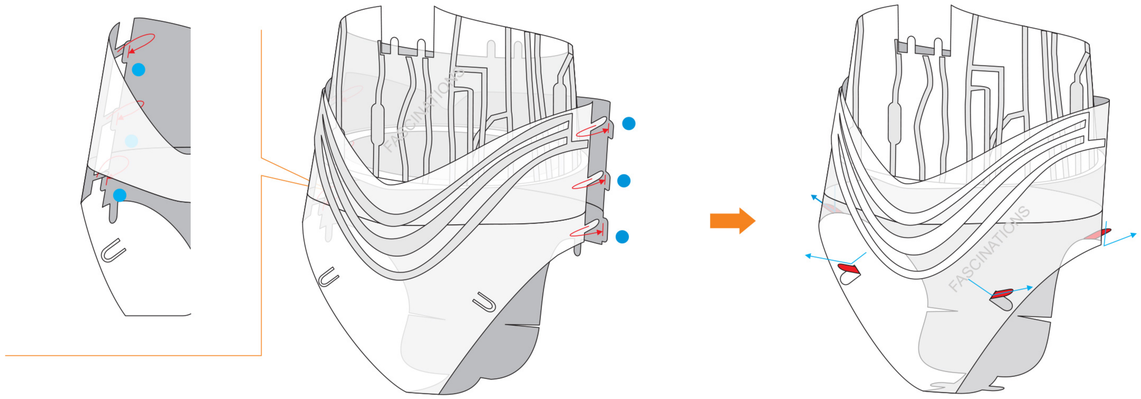

Step 18

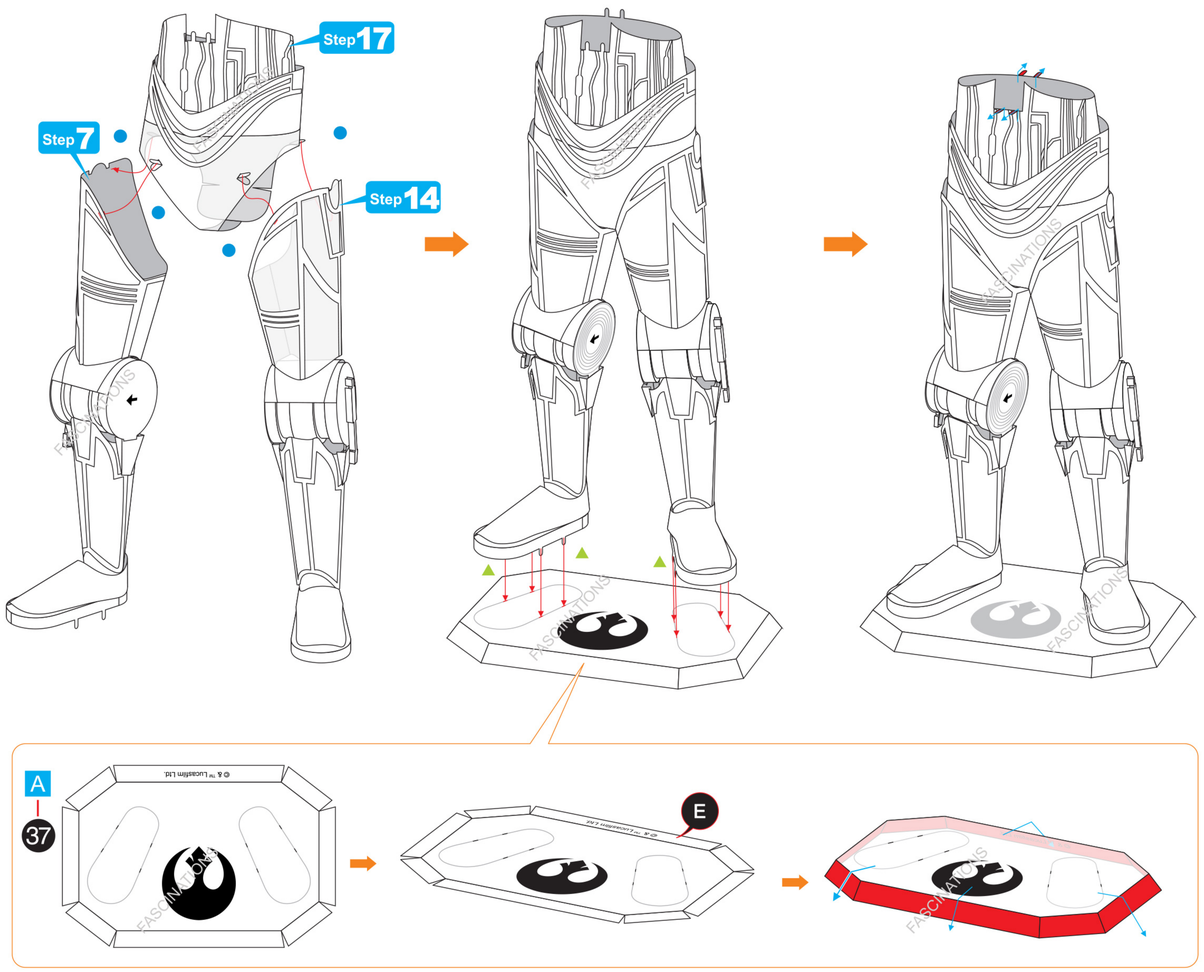

Step 19

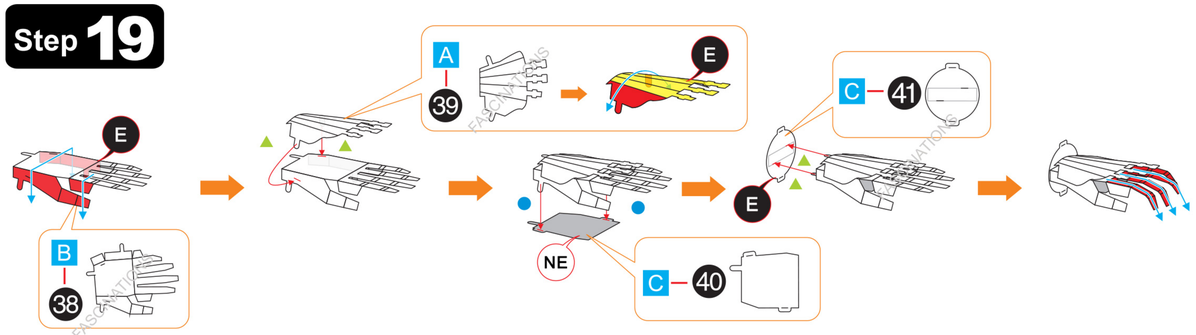

Step 20

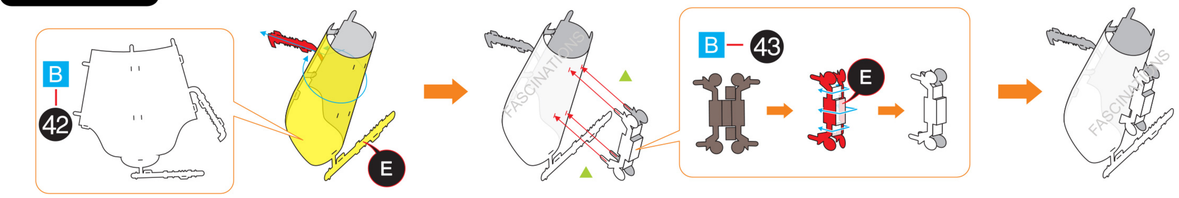

Step 21

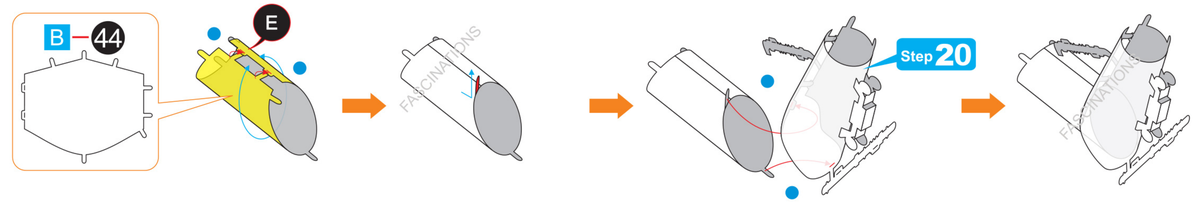

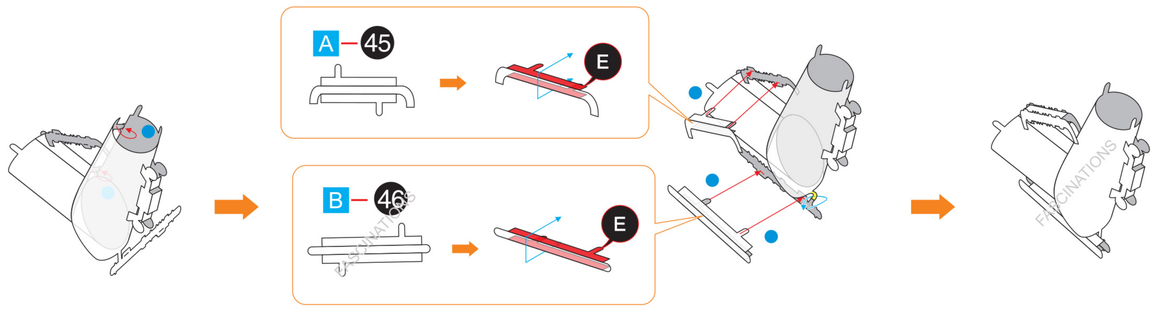

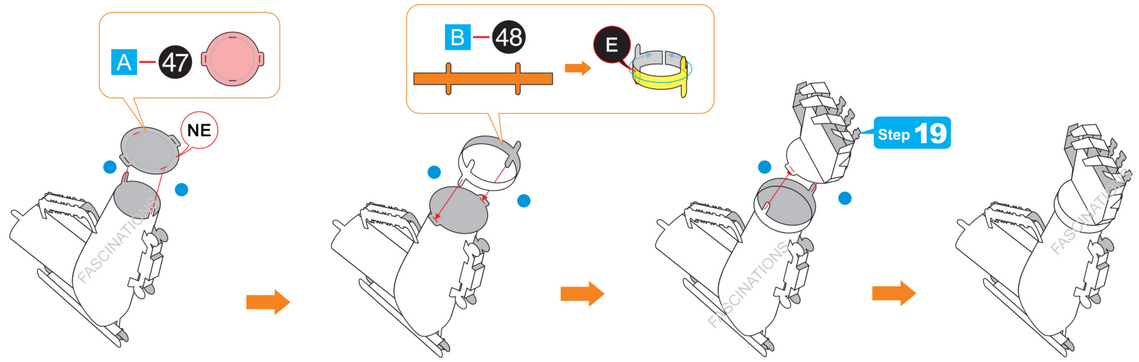

Step 22

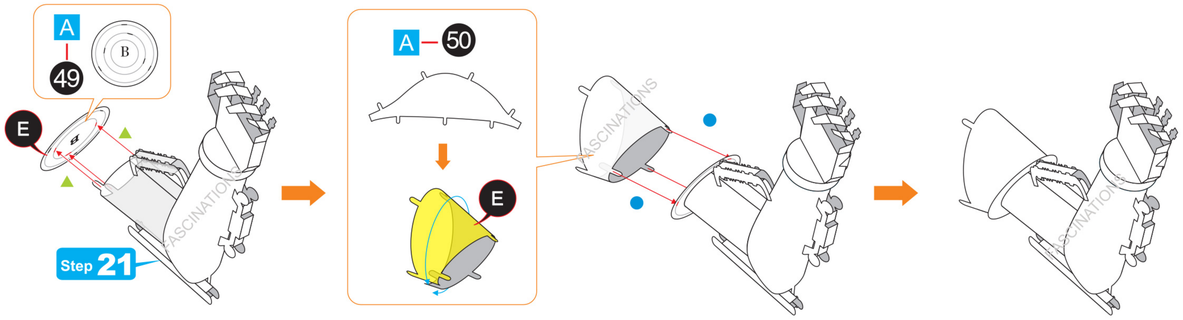

Step 23

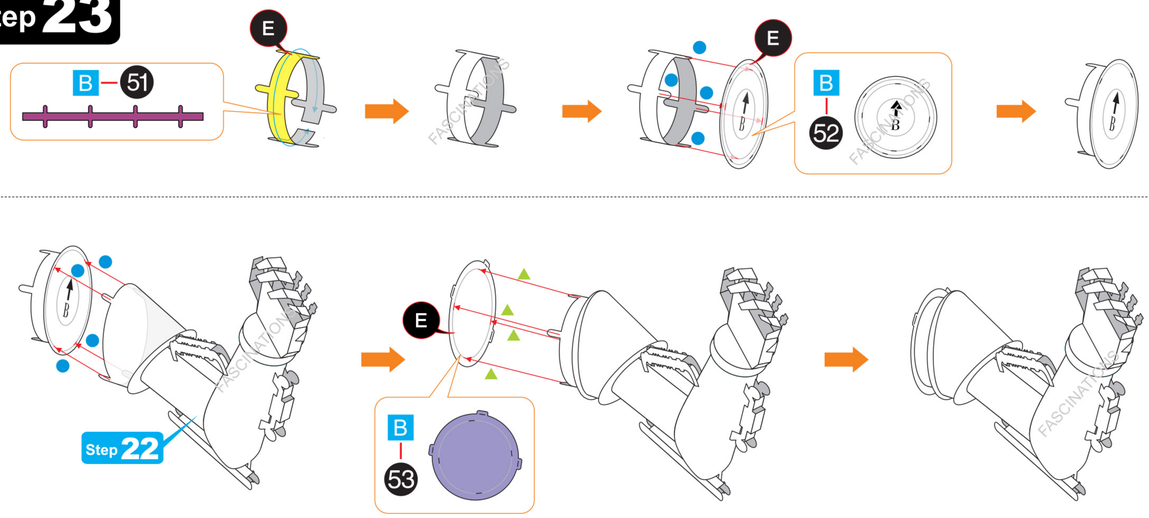

Step 24

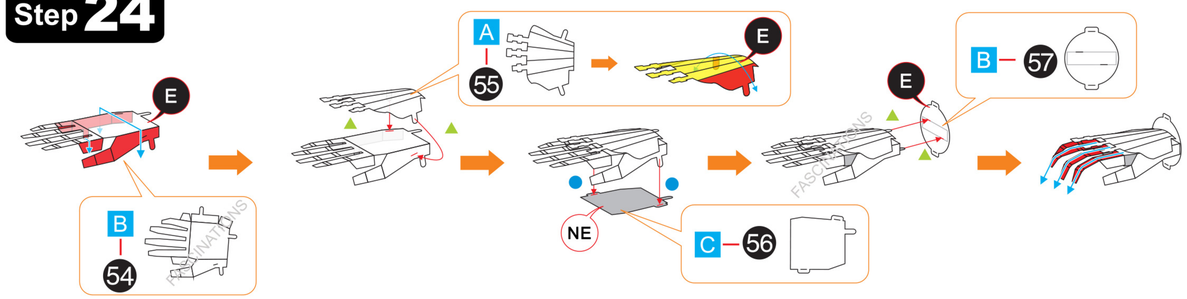

Step 25

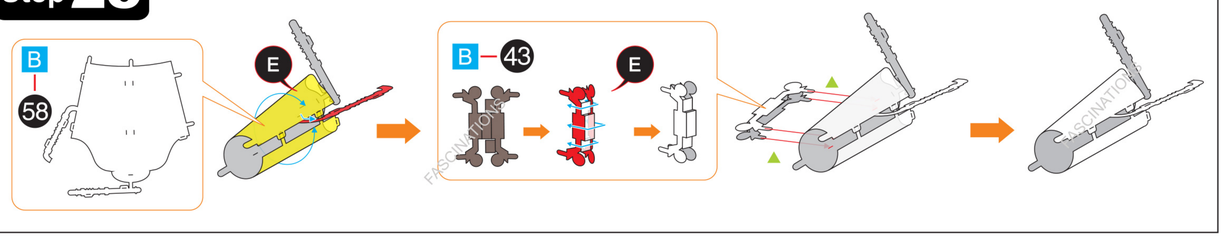

Step 26

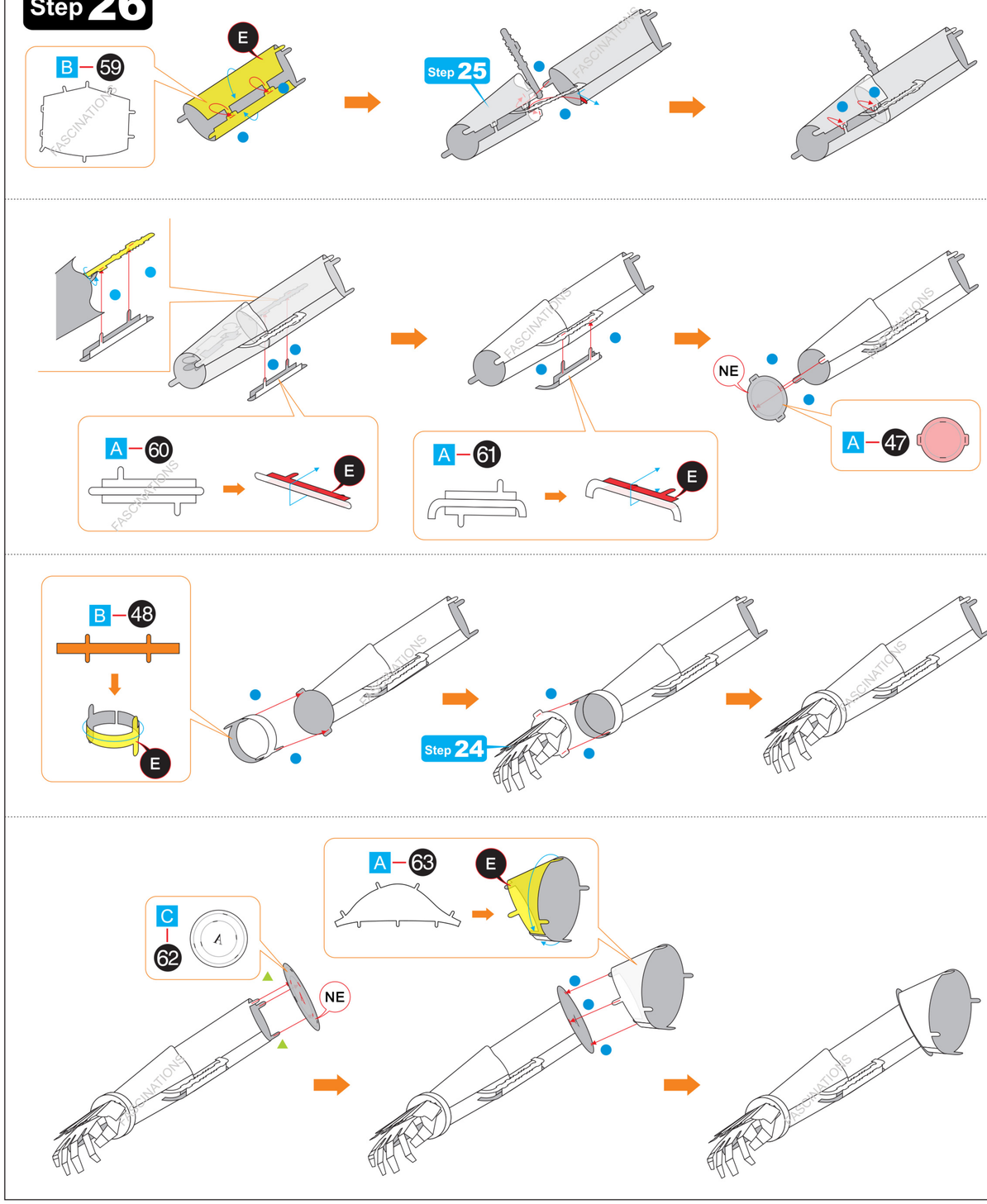

Step 27

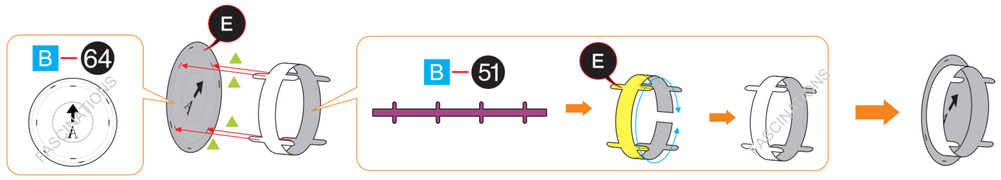

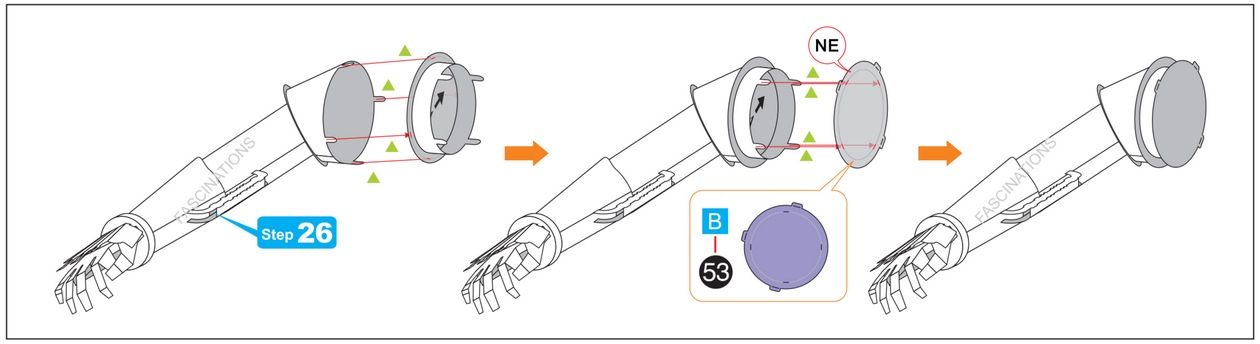
Step 26
NE
B
53

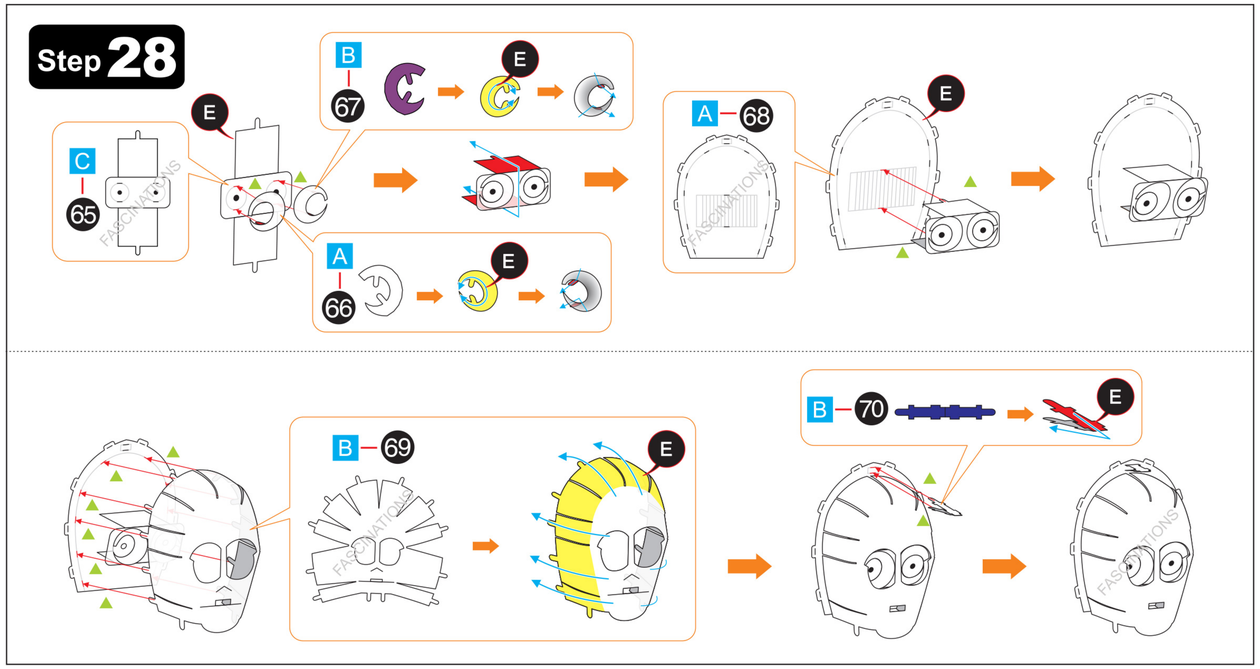
Step 28
C
65
E
B
67
E
A
66
E
A
68
E
B
69
E
B
70
E

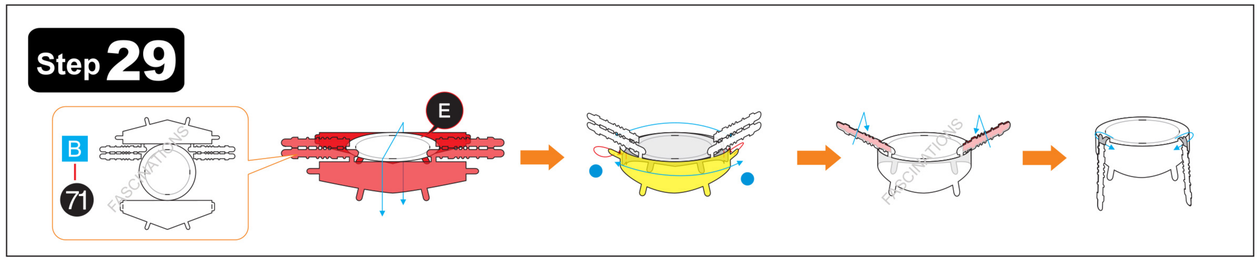
Step 29
B
71
E

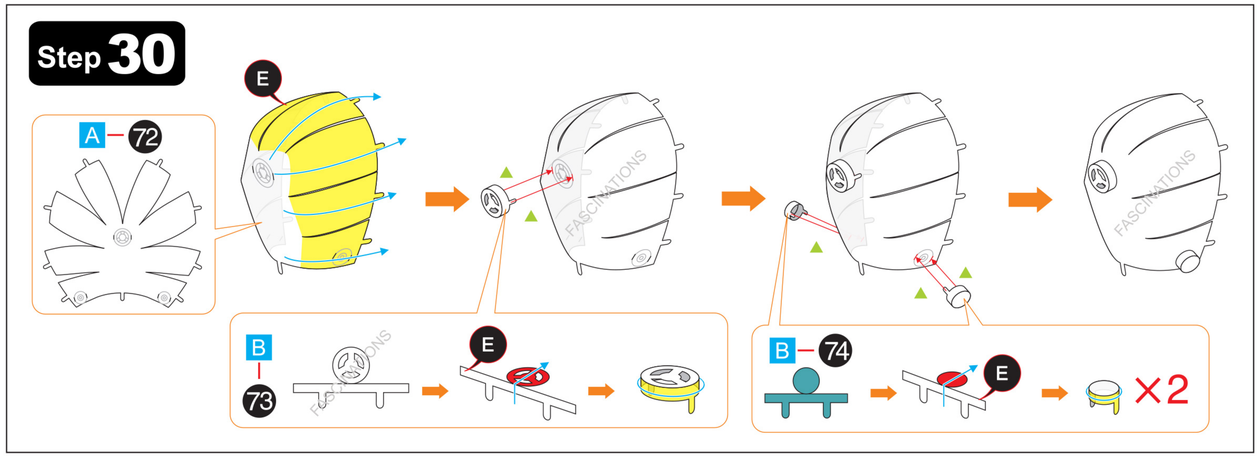
Step 30
A
72
E
B
73
E
B
74
E
×2

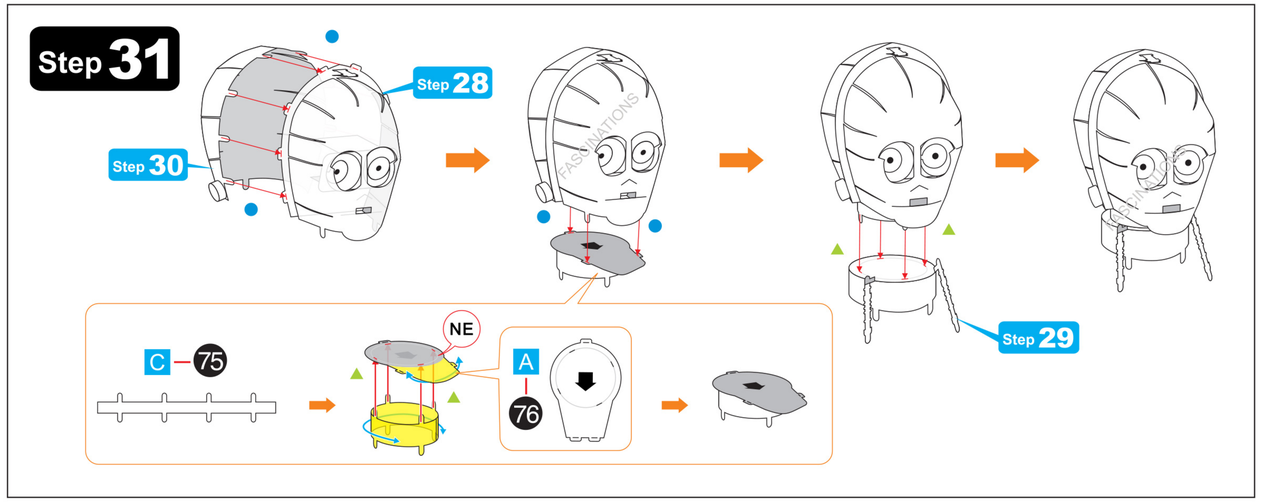
Step 31
Step 28
Step 30
Step 29
C
75
NE
A
76

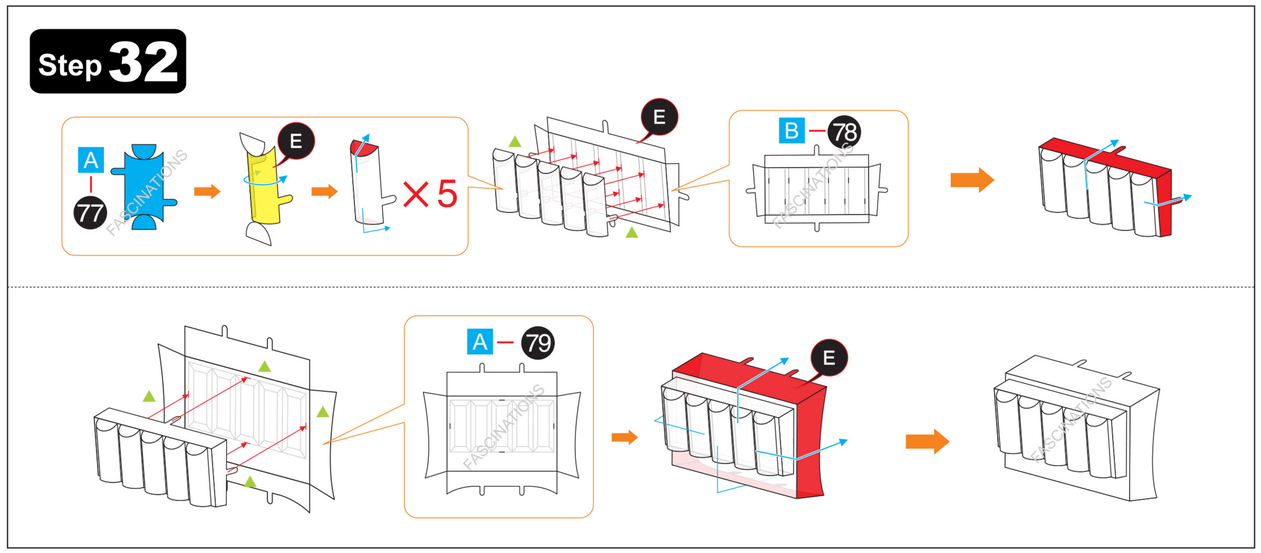
Step 32
A
77
E
×5
E
B
78
A
79
E

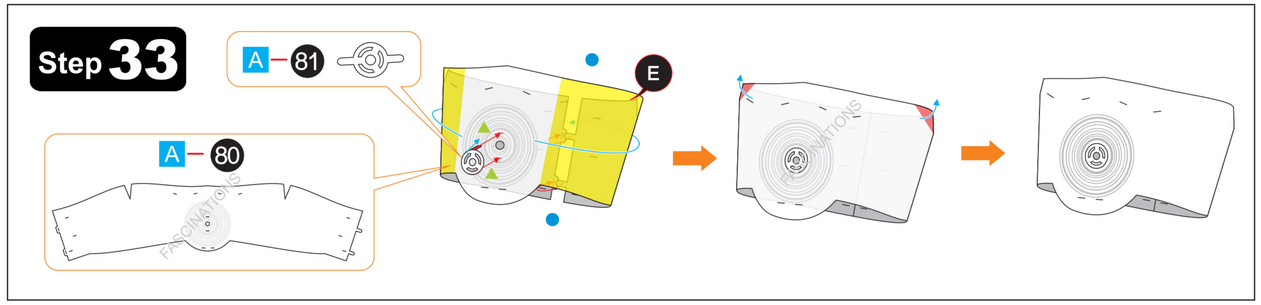
Step 33
A
81
A
80
E

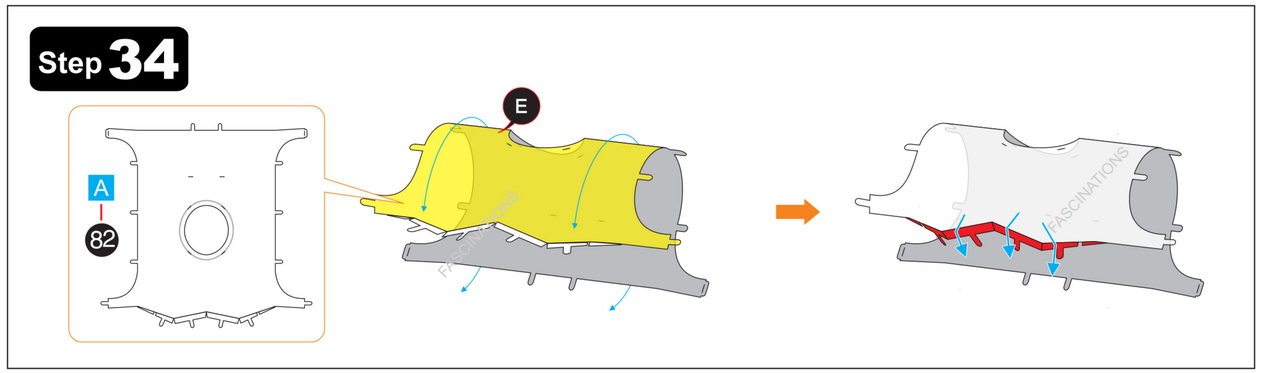
Step 34
A
82
E

Step 35

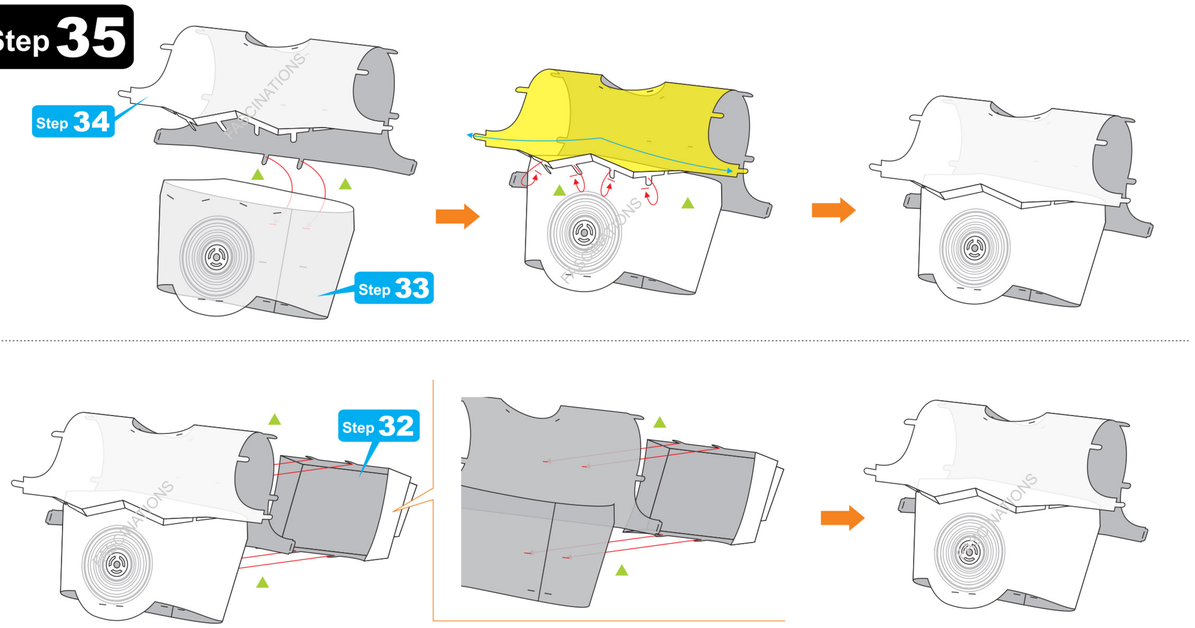

Step 36

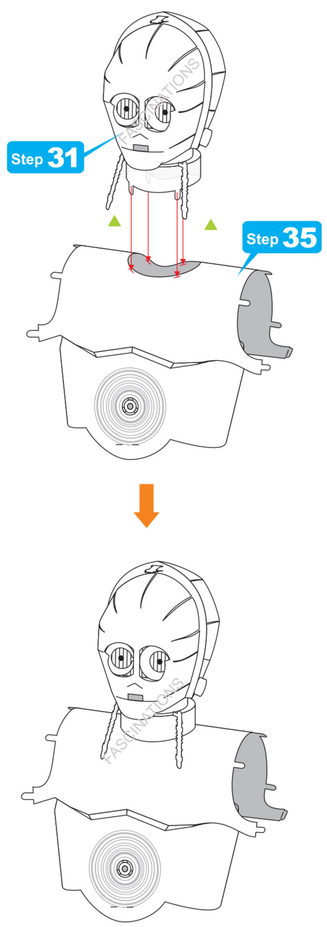

Step 37

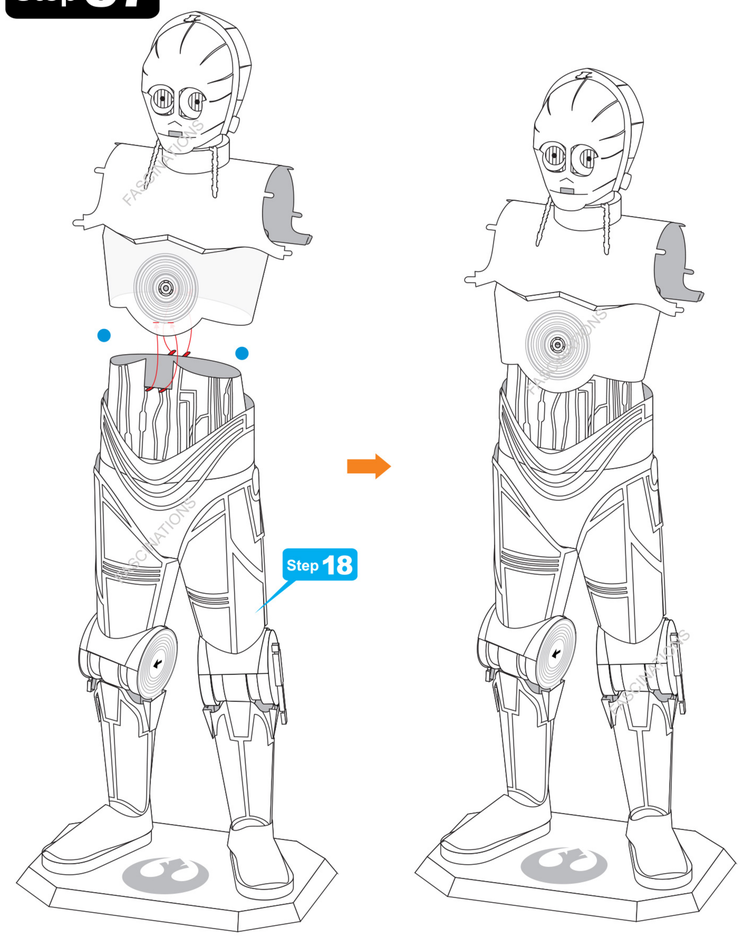

Step 38

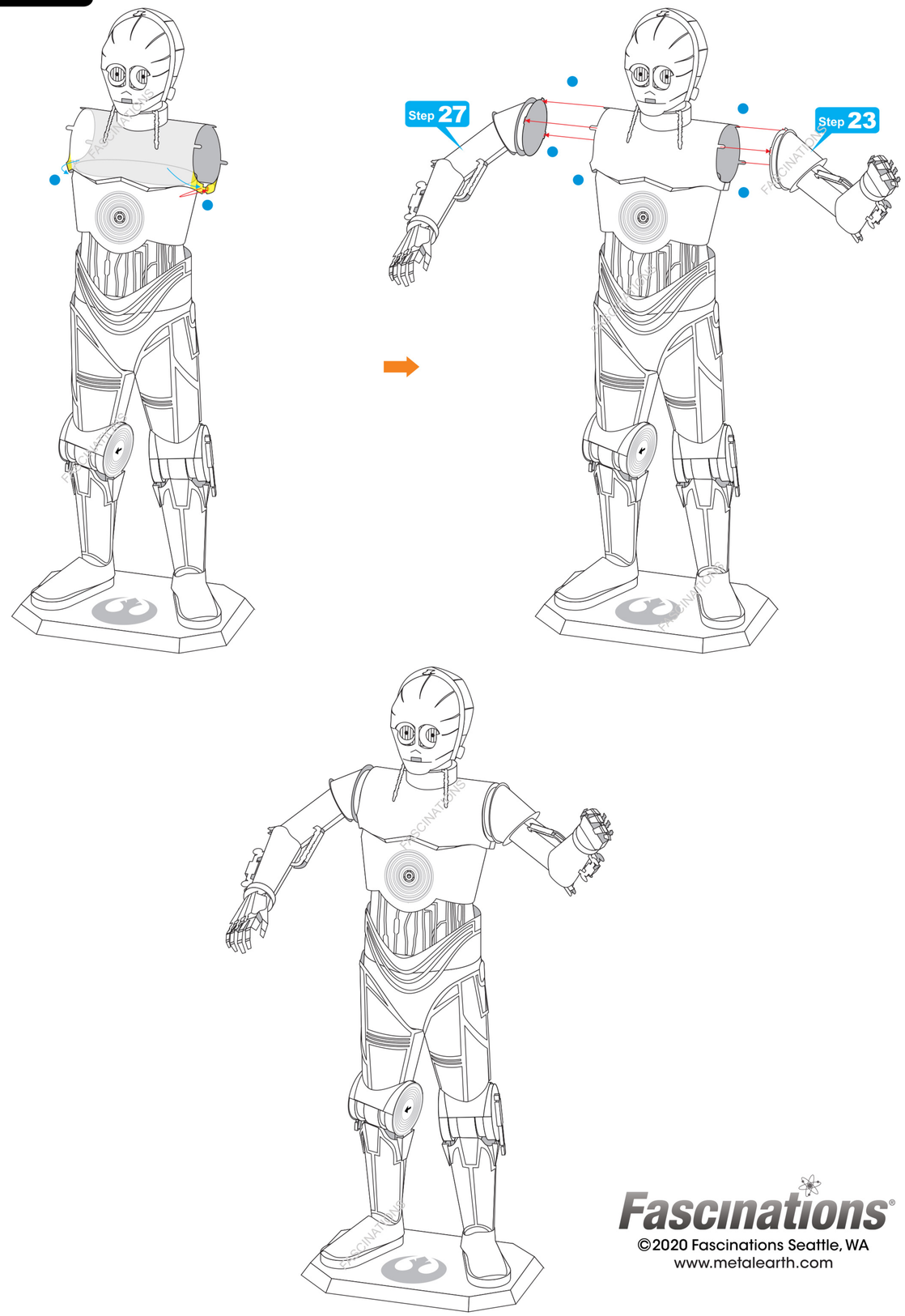

Fascinations®
©2020 Fascinations Seattle, WA
www.metalearth.com