ICONX

Metal Earth
3D METAL MODEL KITS

It is highly recommended that you visit
www.metalearth.com/360/icx005
to see the completed model before assembling your own

METAL SHEET 1

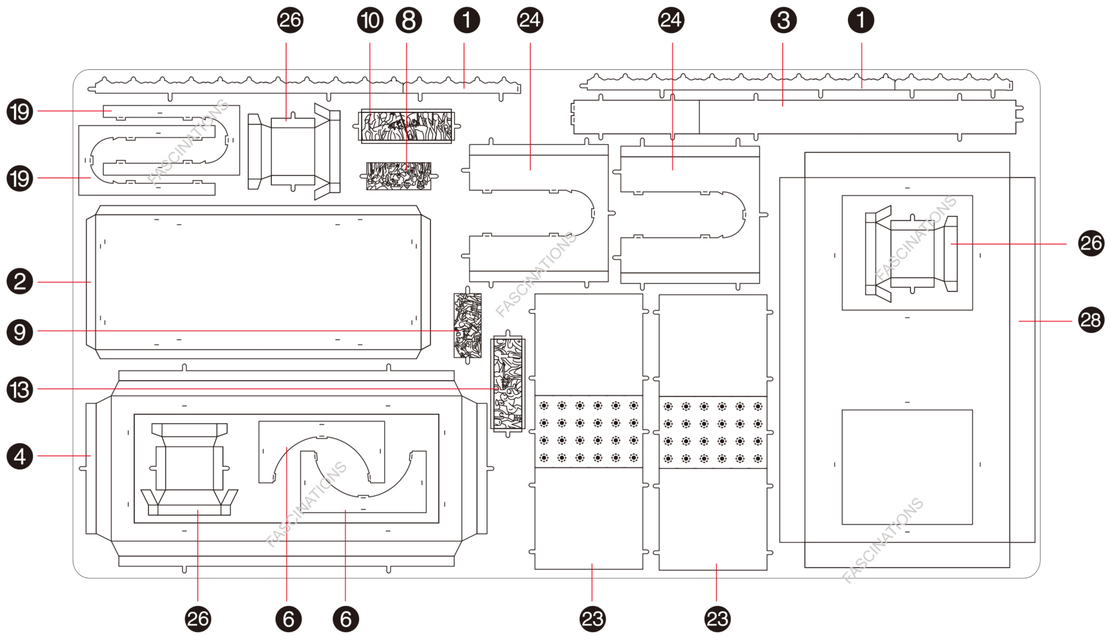

METAL SHEET 2

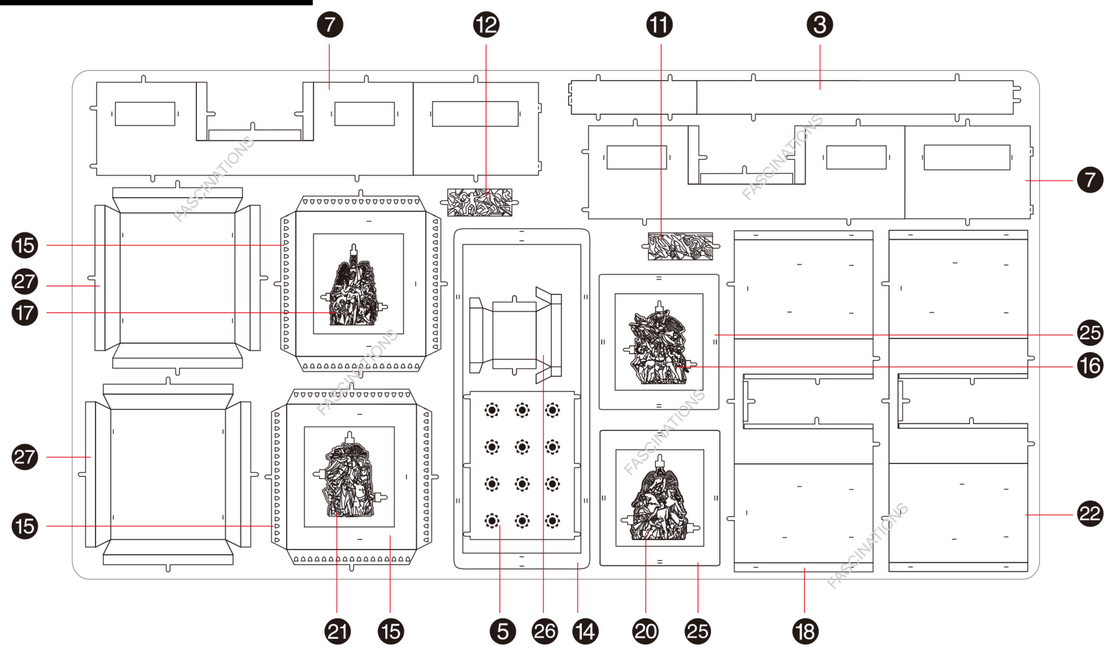

In order to avoid possible injury from sharp edges, please carefully discard the metal sheets after parts have been removed

Go to www.metalearth.com/360/icx005 to see the zoomable PDF version of this instruction sheet

ICX005

Arc de Triomphe

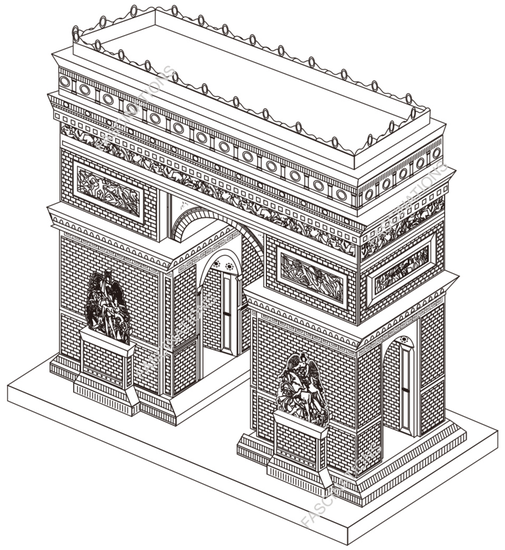

TO CREATE THE BEST CONNECTIONS

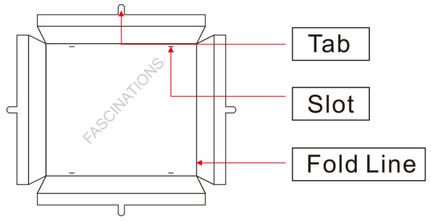

Legends:

- E — Engraved side
- NE — Non-engraved side
- Attention point
- Insert tab and bend 90 degrees
- Insert tab and twist 90 degrees

Assembly tip:

If needed, slightly twist tabs to hold parts together then untwist and bend them down for a nice finish

Recommended tools:

-Wire cutters: helpful for taking parts from the metal sheets.

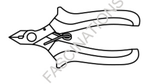

-Tweezers or needle nose pliers: helpful for folding parts, bending and twisting tabs.

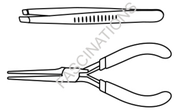

ASSEMBLY STEPS

Step 1

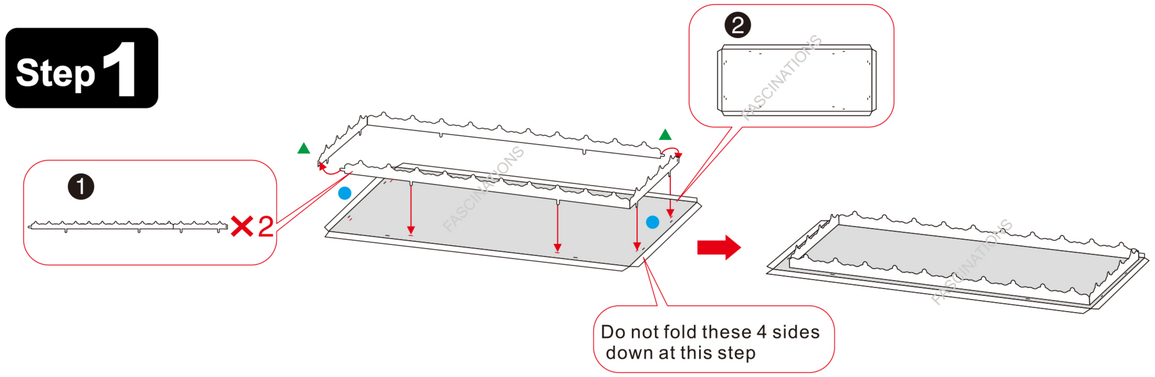

Step 2

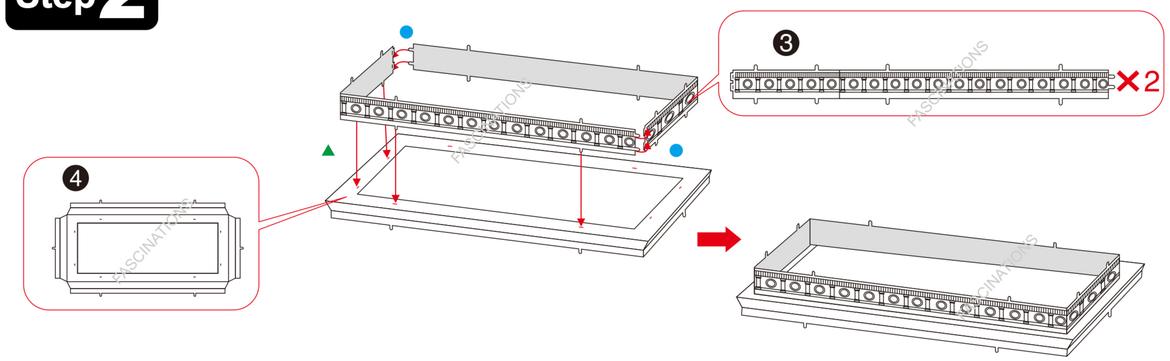

Step 3

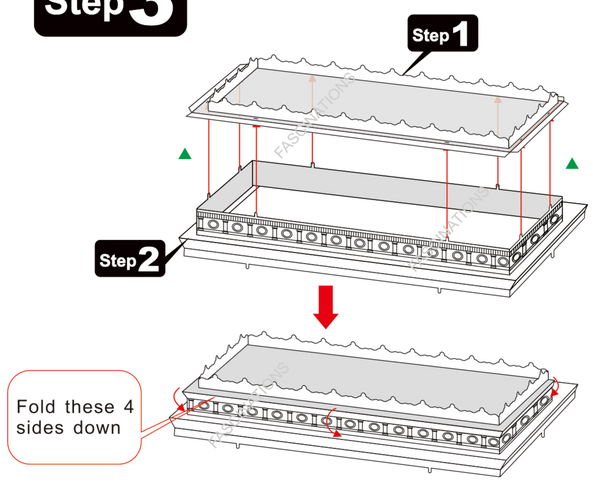

Step 4

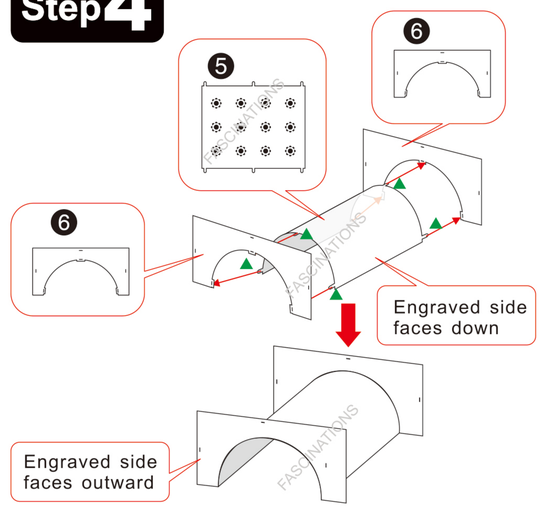

Step 5

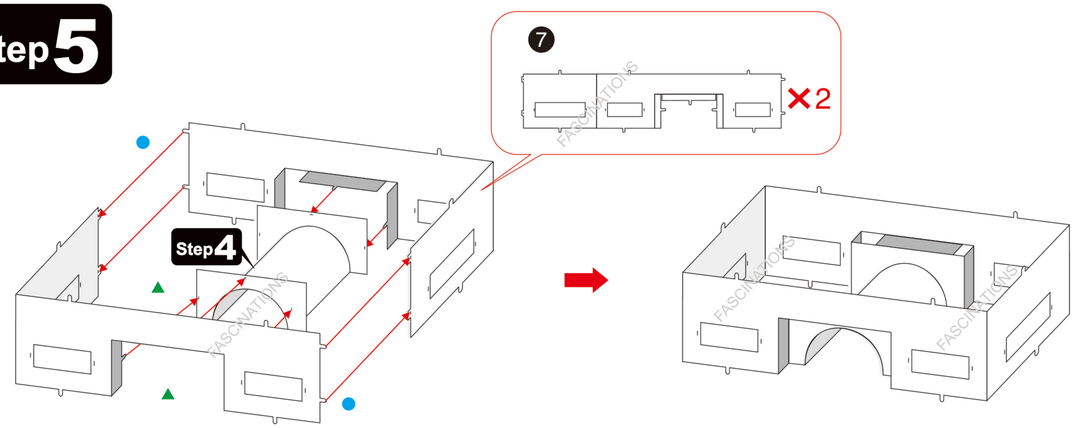

Step 6

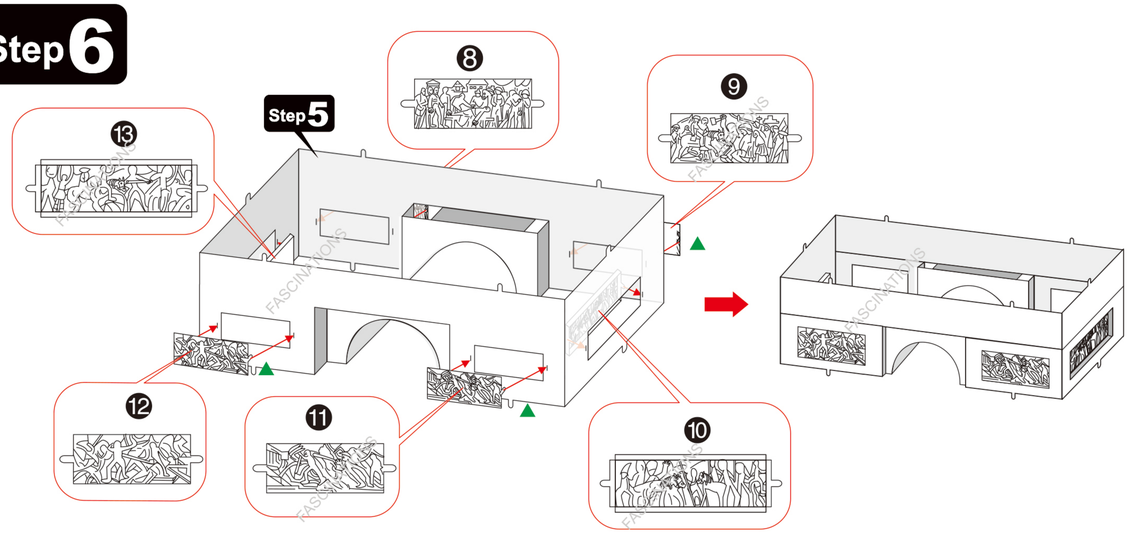

Step 7

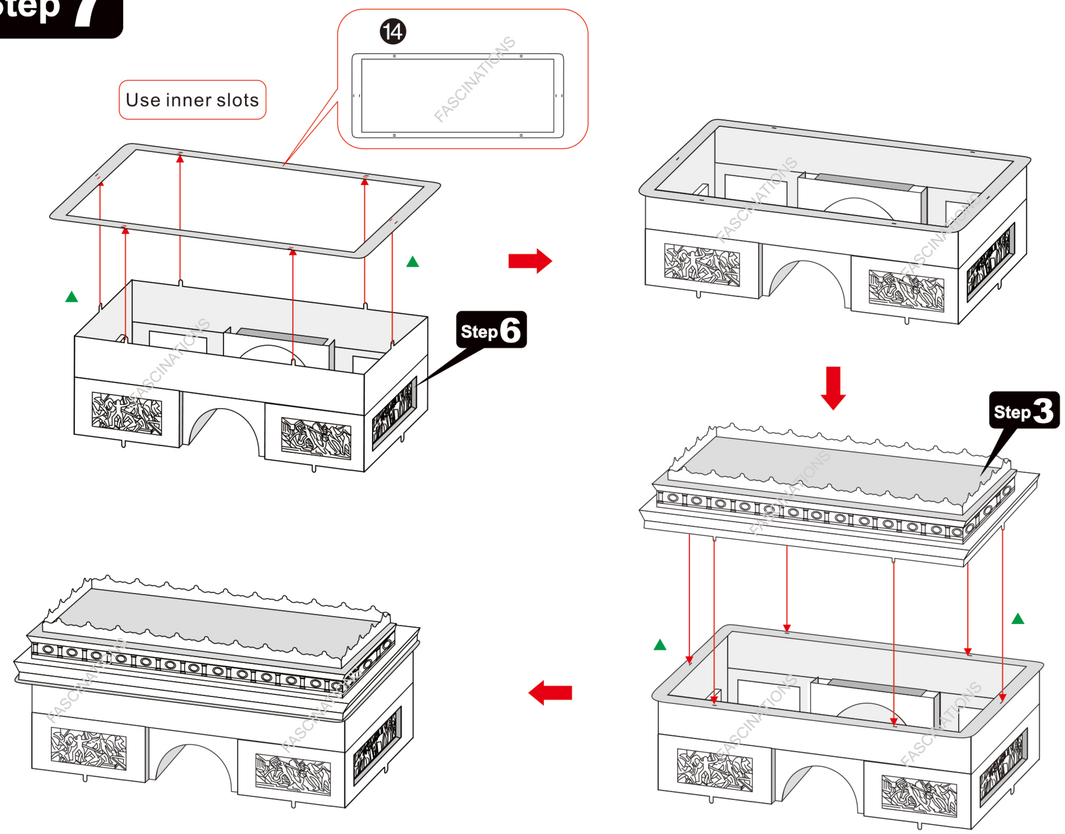

Step 8

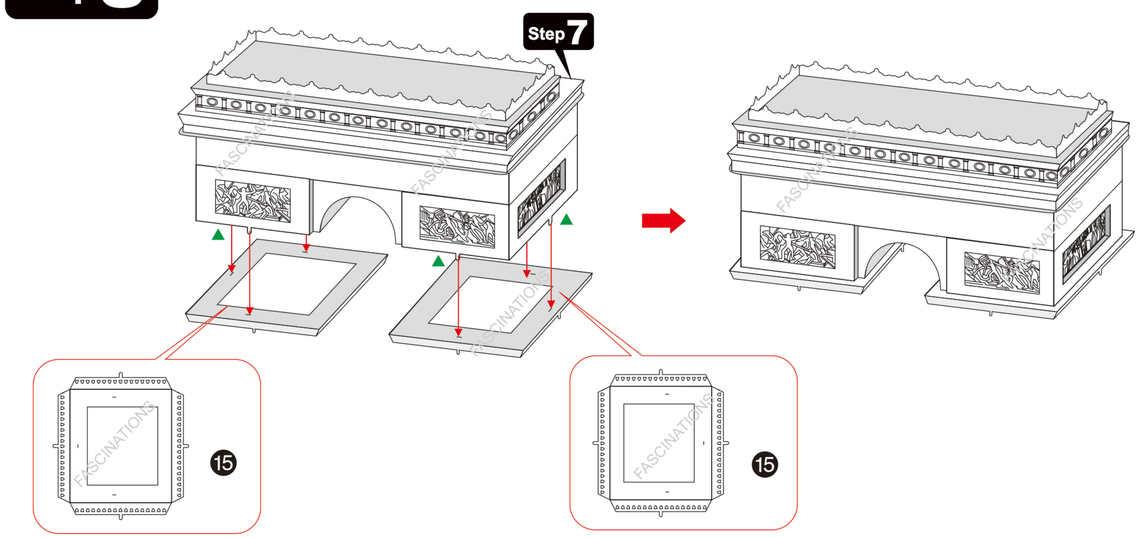

Step 9

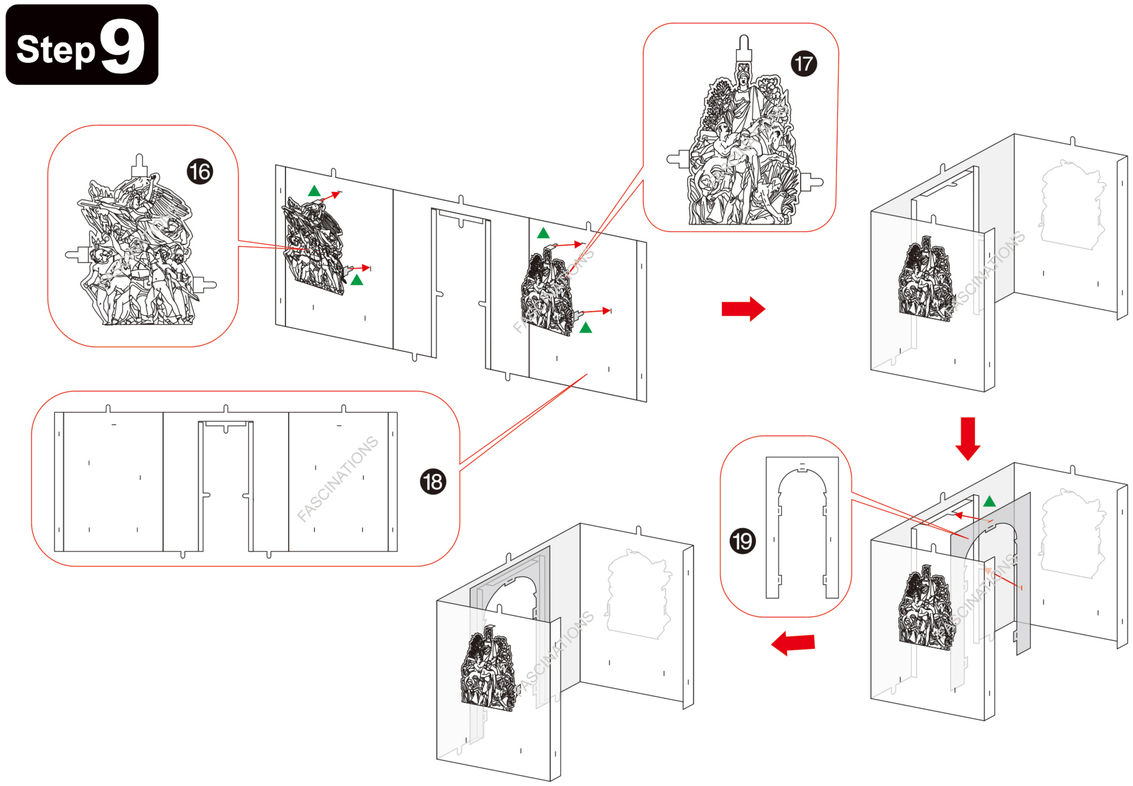

Step 10

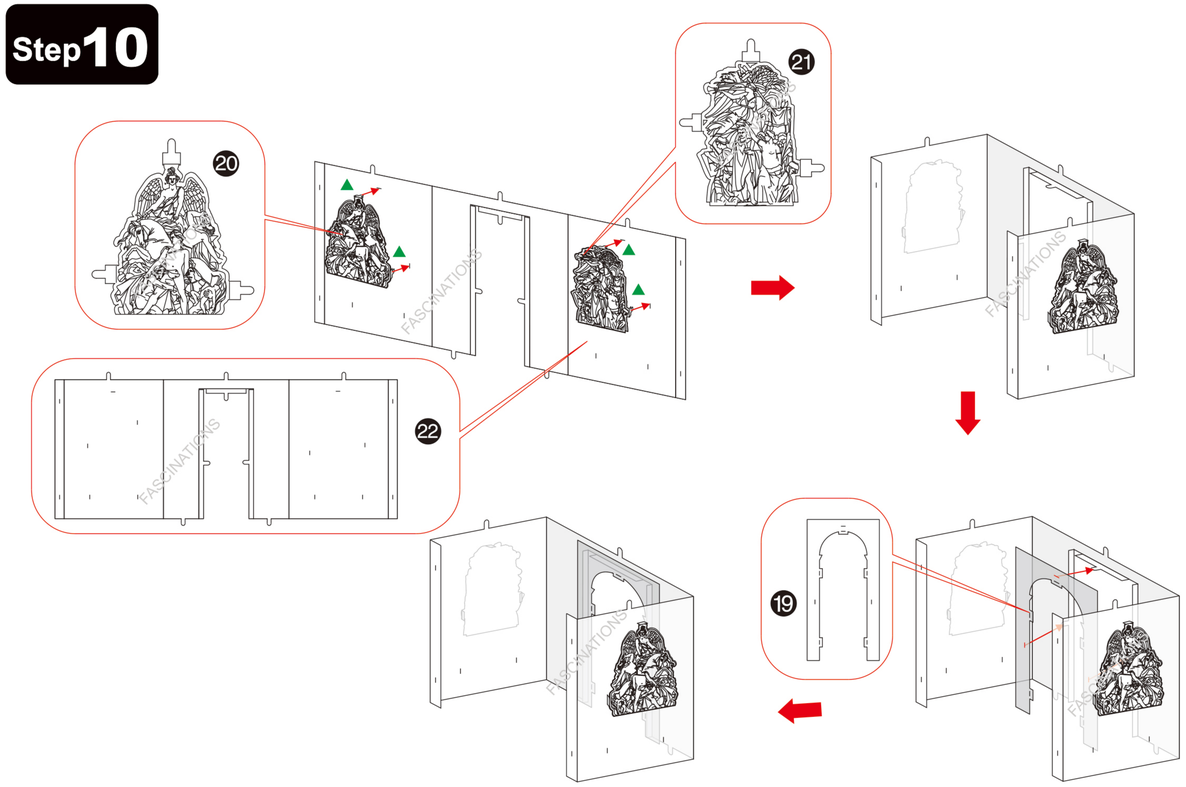

Step 11

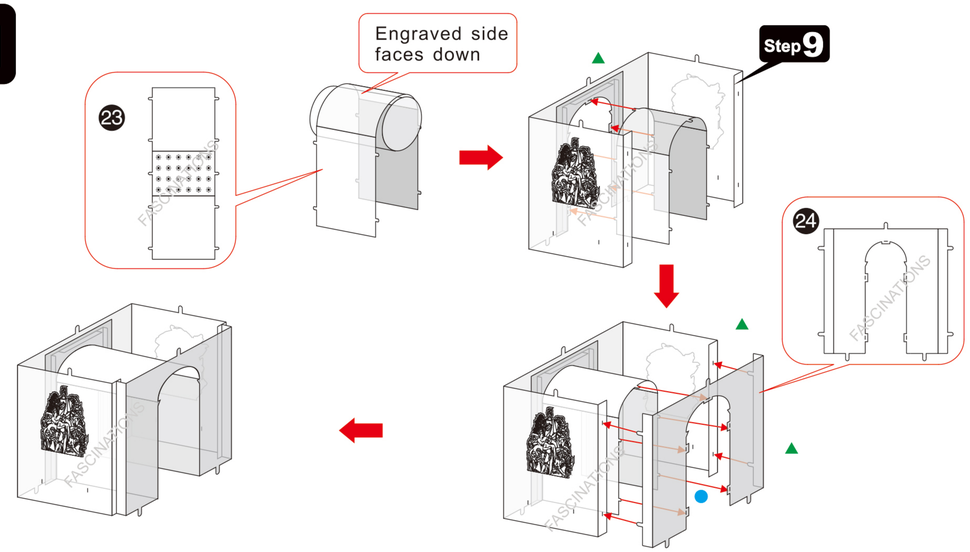

Step 12

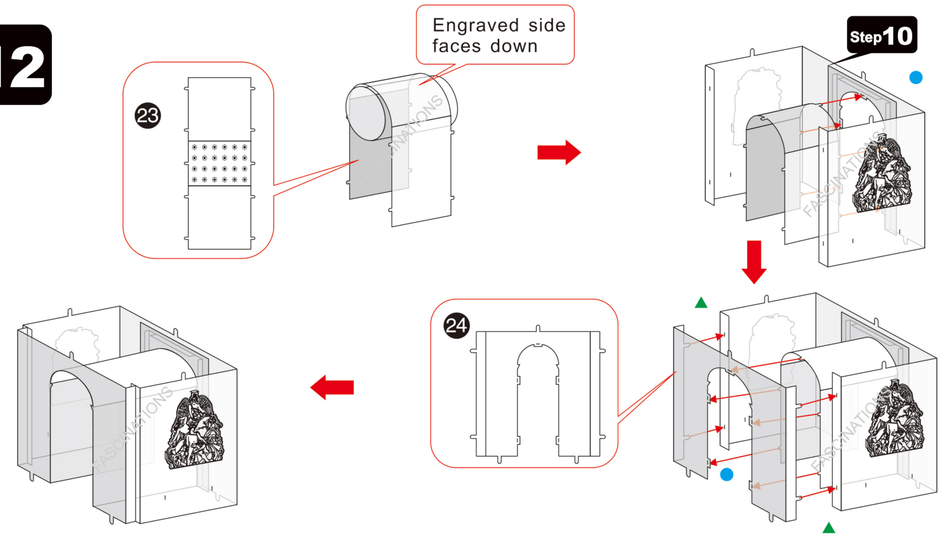

Step 13

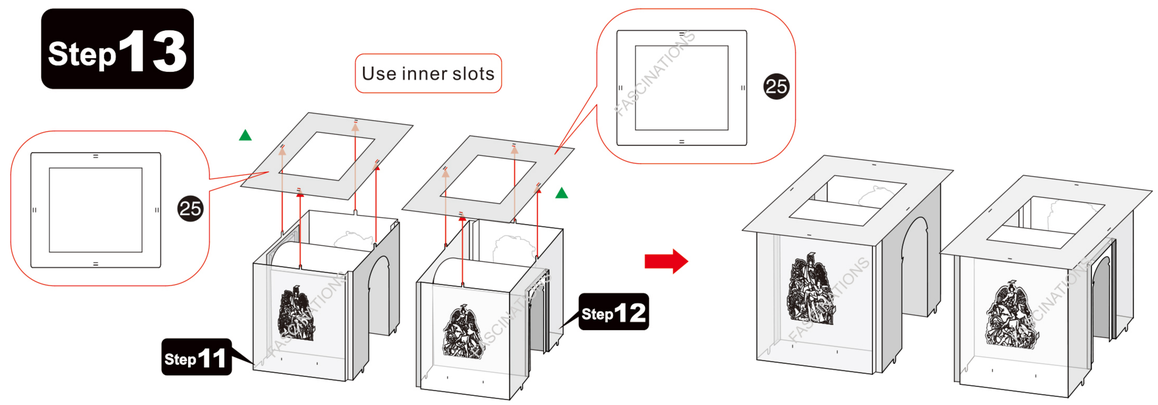

Step14

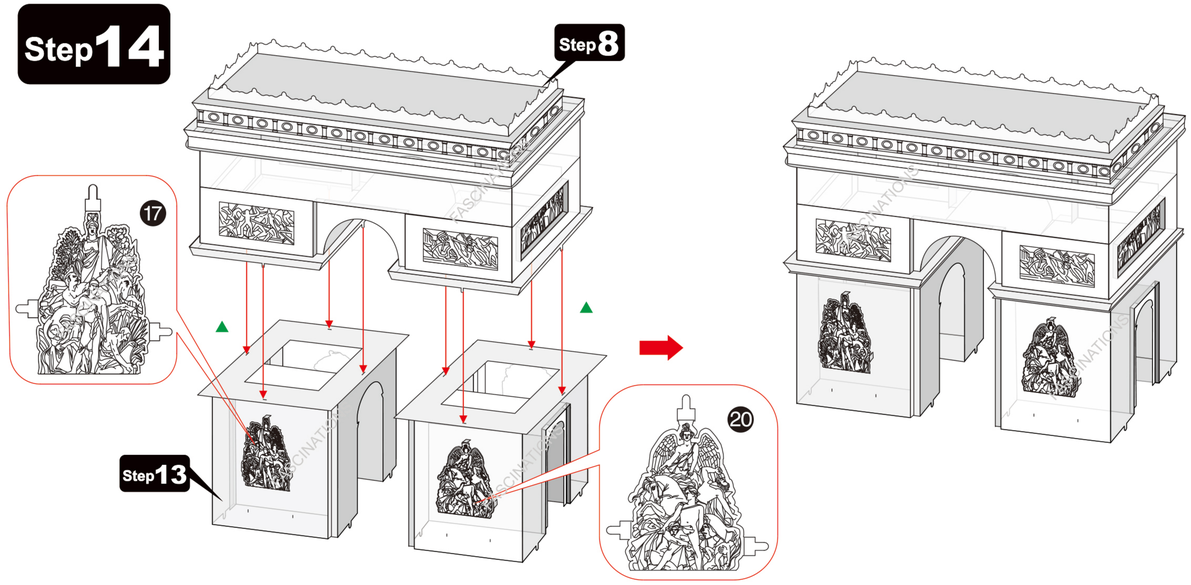

Step15

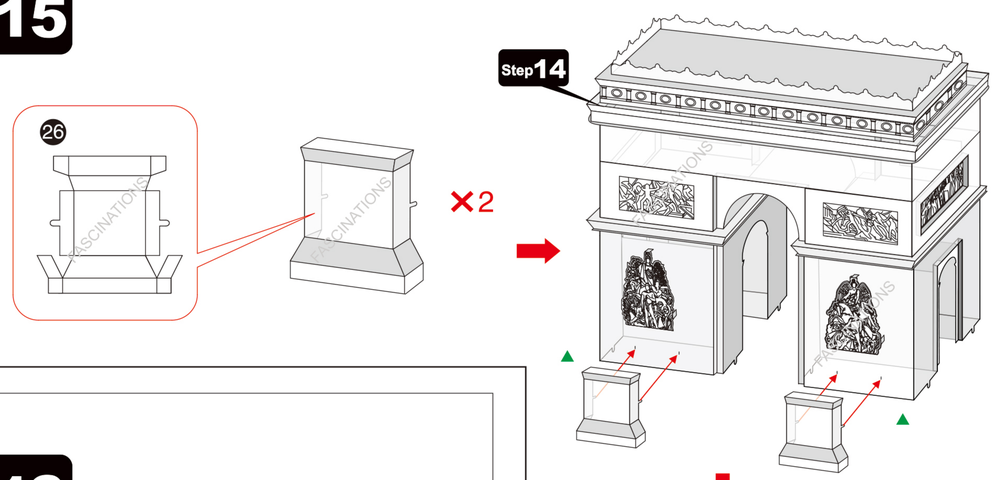

Step16

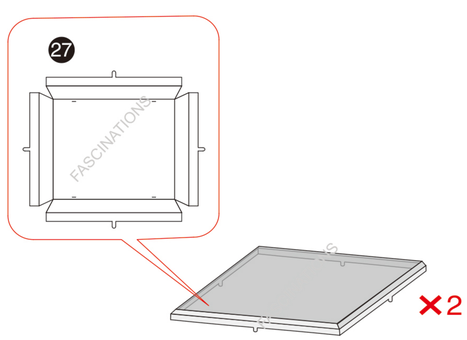

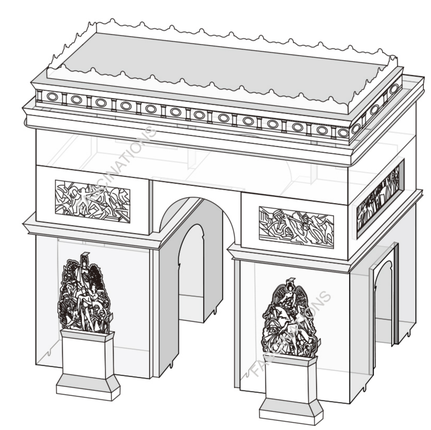

Step17

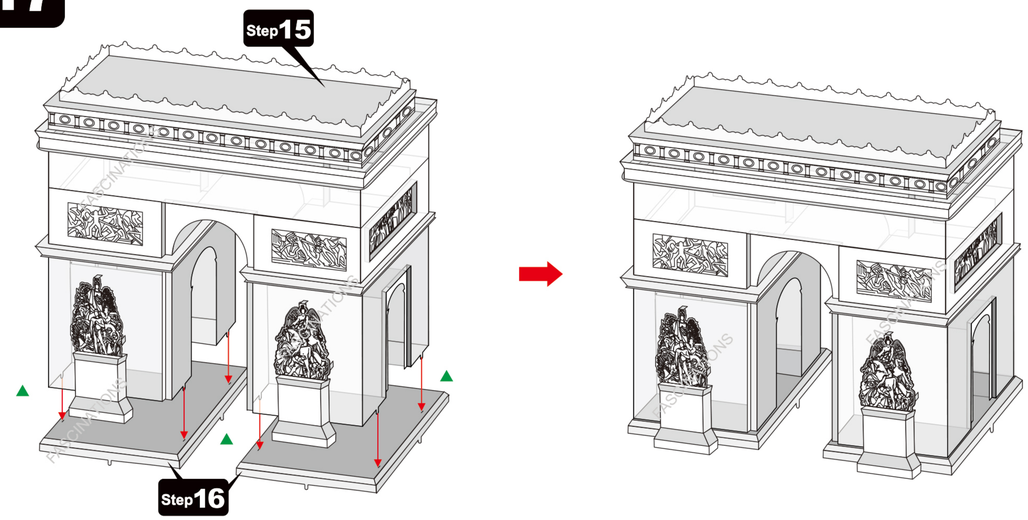

Step18

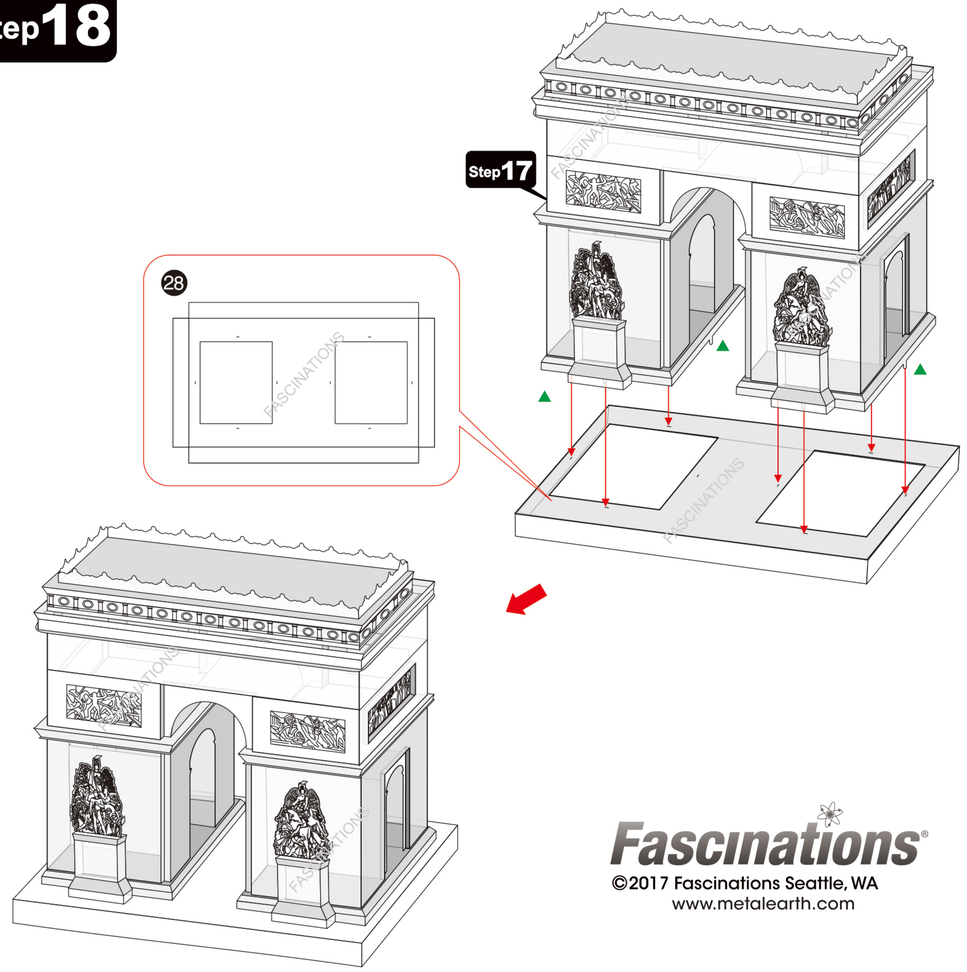

Fascinations®
©2017 Fascinations Seattle, WA
www.metalearth.com